CITY OF LANCASTER, TEXAS

STANDARD CONSTRUCTION DETAILS

Lancaster

APPROVED FOR USE _____ _____
JASON COSBY, DATE
DIRECTOR OF PUBLIC WORKS

PUBLIC WORKS

DECEMBER 1999

SECTION	DESCRIPTION	SHEET NO.
GENERAL NOTES	GENERAL CONSTRUCTION NOTES	GN-00
STREET	PAVING / SECTIONS	STREET-01
STREET	PAVING / SECTIONS / DETAILS	STREET-02
STREET	PAVING / JOINTS	STREET-03
STREET	PAVING / DETAILS	STREET-04
STREET	PAVING / ALLEY / DRIVEWAYS	STREET-05
STREET	PAVING / RADIUS	STREET-06
STREET	PAVING / DETAILS / EROSION	STREET-07
STREET	PAVING / SIDEWALKS	STREET-08
STORM SEWER	STORM SEWER / INLET	STM SEW-01
STORM SEWER	STORM SEWER / INLET	STM SEW-02
STORM SEWER	STORM SEWER / INLET / DETAIILS	STM SEW-03
STORM SEWER	CHANNELS / CONCRETE	STM SEW-04
STORM SEWER	CHANNELS / GABIONS	STM SEW-05

SECTION	DESCRIPTION	SHEET NO.
WATER	WATER	WATER-01
WATER	WATER	WATER-02
WATER	PAVING / SECTIONS / DETAILS	WATER-03
SANITARY SEWER	SANITARY SEWER	SEWER-01
SANITARY SEWER	SANITARY SEWER / MANHOLES	SEWER-02
SANITARY SEWER	SANITARY SEWER	SEWER-03
EMBEDMENT	TYPICAL EMBEDMENTS	EMBED-01
WALL	THIN BRICK SCREENING WALL	WALL-01
WALL	BRICK SCREENING / RETAINING	WALL-02

NOTE:
IF CONFLICT EXISTS BETWEEN HARD COPY AND ELECTRONIC FILE, HARD COPY WILL GOVERN.

99147-00.DWG 01/27/00 EWH

PAVING NOTES

1. CONCRETE FOR ALL STREETS SHALL BE IN ACCORDANCE WITH NCTCOG CLASS "A" CONCRETE (3,000 P.S.I. COMPRESSIVE STRENGTH @ 28 DAYS). CONCRETE FOR ALL ALLEYS SHALL BE IN ACCORDANCE WITH NCTCOG CLASS "C" CONCRETE (3,600 COMPRESSIVE STRENGTH @ 28 DAYS).
2. REINFORCING STEEL SHALL BE DEFORMED BARS NO. 3 ON 18 INCH CENTERS OR NO. 4 BARS ON 24 INCH CENTERS. REINFORCING SHALL BE IN BOTH DIRECTIONS ON CENTER. REINFORCING STEEL SHALL BE IN ACCORDANCE WITH ASTM 615, 616 AND 617.
3. ALL REINFORCING STEEL SHALL BE TIED (100%). REINFORCING STEEL SHALL BE SET ON PLASTIC CHAIRS. BAR LAPS BE MINIMUM 30 DIAMETERS.
4. EXPANSION JOINTS SHALL BE SPACED EVERY 200 FEET AND AT ALL INTERSECTIONS. ALLEYS SHALL HAVE A MINIMUM OF TWO EXPANSION JOINTS.
5. SAWED TRANSVERSE DUMMY JOINTS SHALL BE SPACED EVERY 20 FEET ON PAVING 8 INCHES OR THICKER AND EVERY 15 FEET FOR PAVING THICKNESS LESS THAN 8 INCHES. SAWING SHALL OCCUR WITHIN 5 TO 12 HOURS AFTER THE POUR INCLUDING SEALING. OTHERWISE THE SECTION SHALL BE REMOVED AND LONGITUDINAL BUTT JOINT CONSTRUCTED.
6. SUBGRADE UNDER PAVEMENTS SHALL BE A MINIMUM OF 6 INCHES OF LIME TREATED SUBGRADE. ONLY HYDRATED LIME SHALL BE UTILIZED. OPTIMUM LIME SHALL BE APPLIED. OPTIMUM LIME CONTENT SHALL BE DETERMINED DURING THE EXCAVATION BY THE USE OF A LIME SERIES TEST. LIME SERIES TEST SHALL BE TAKEN ALONG THE EXCAVATION AT ALL CHANGES IN SOIL AND A MINIMUM OF 300 FEET. LIME SERIES SHALL BE COMPLETED BY AN INDEPENDENT LABORATORY APPROVED BY THE CITY.
7. LIME TREATED SUBGRADE SHALL BE COMPACTED TO A DENSITY OF NOT LESS THAN 95 PERCENT OF THE MAXIMUM DENSITY AS DETERMINED BY ASTM D 698.. MOSTURE CONTENT SHALL BE WITHIN –2 TO +4 OF OPTIMUM. DENSITY TEST RESULTS SHALL BE COMPLETED BY AN INDEPENDENT LABORATORY APPROVED BY THE CITY. ALL RESULTS SHALL BE PROVIDED TO THE CITY.
8. LIME TRIMMINGS ARE NOT ACCEPTABLE FOR ANY USE.
9. ALL FILL SHALL BE COMPACTED BY MECHANICAL METHODS. MAXIMUM LOOSE LIFT FOR COMPACTION SHALL BE 8 INCHES. ALL LIFTS SHALL BE TESTED FOR DENSITY BY AN INDEPENDENT LABORATORY APPROVED BY THE CITY. DENSITY REQUIREMENT SHALL BE AS SHOWN ON THE PLANS FOR THE TYPE OF MATERIAL CALLED FOR IN THE PLANS.
10. ALL DISTURBED AREAS OF ROADWAY WORK SHALL HAVE GRASS ESTABLISHED IMMEDIATELY. GRASS SHALL MEET THE REQUIREMENTS OF ITEM 3.8, 3.9, 3.10 & 3.11 OF NCTCOG.
11. ALL AREAS TO BE EXCAVATED OR FILLED SHALL HAVE EROSION CONTROL PLACED PRIOR TO COMMENCING EARTHWORK. EROSION CONTROL DEVICES SHALL BE MAINTAINED THROUGHOUT THE PROJECT IN ACCORDANCE WITH NCTCOG ITEM 3.12.
12. ALL SIDEWALKS SHALL INCLUDE BARRIER FREE RAMPS AT INTERSECTING STREETS, ALLEYS, DRIVEWAYS, ETC. BARRIER FREE RAMPS SHALL MEET CURRENT ADA REQUIREMENTS AND BE APPROVED BY THE TEXAS LICENSING BOARD.
13. SIDEWALKS SHALL BE DOWELED INTO PAVEMENT WHERE IT ABUTS DRIVEWAYS. EXPANSION JOINT MATERIAL SHALL BE USED AT THESE LOCATIONS.
14. NO VEHICLES SHALL BE PERMITTED ON CONCRETE PAVEMENT WITHOUT APPROVAL FROM THE CITY. THE CITY WILL MAKE DETERMINATION BASED ON CONCRETE BREAK REPORT.

LINED CHANNELS

1. CONSTRUCTION JOINT SHOWN IN DETAILS FOR CONVENIENCE ONLY, MONOLITHIC CONSTRUCTION MAY BE USED.
2. ALL VISIBLE SURFACES SHALL BE A TROWEL FINISH.
3. ALL REINFORCING STEEL SHALL BE 3/8" DIAMETER AND SPACED 12" CENTER TO CENTER BOTH WAYS UNLESS OTHERWISE SPECIFIED.
4. IF WOOD FORMS ARE USED WITH CONSTRUCTION JOINT, THEY SHALL BE TWO, 2"x4", AND SHALL NOT BE REMOVED UNTIL CONCRETE ON SLOPES IS READY TO BE PLACE.
5. ALL CONCRETE IN LINED CHANNEL SHALL BE NCTCOG CLASS "A" (MINIMUM 3,000 P.S.I.) CONCRETE.
6. FLAT BOTTOM TO BE CONSTRUCTED WHEN CHANNEL WIDTH IS LESS THAN 12 FOOT.
7. ¾" CHAMFER ON ALL CONCRETE CORNERS.

STORM SEWER

1. THE FLOOR OF THE EXCAVATION FOR INLET BOX MUST PROVIDE A FIRM, LEVEL BED FOR THE BASE SECTION TO REST UPON.
2. A MINIMUM OF 6 INCHES OF 1" DIAMETER (MAXIMUM) ROCK OR GRAVEL SHALL BE USED TO PREPARE THE BEDDING TO FINAL GRADE OR IN LIEU OF THIS, AT LEAST 6 INCHES OF 2-SACK CEMENT STABILIZED SAND SHALL BE USED TO PREPARE THE BEDDING TO GRADE. CEMENT STABILIZED-SAND SHALL BE ALLOWED TO SET BY KEEPING HOLE PUMPED DRY.
3. AFTER PIPE HAS BEEN LAID ON PROPER BEDDING, BACKFILLING TO COMMENCE WITH 8" MAXIMUM LOOSE LIFTS MECHANICALLY COMPACTED TO 95% STANDARD PROCTOR UNDER ROADWAY OR 12" MAXIMUM LOOSE LIFT BEHIND CURB. MAXIMUM SIZE ROCK IN BACKFILL SHALL NOT EXCEED 4 INCHES IN DIAMETER.
4. PRECAST INLETS MUST BE APPROVED BY THE CITY.
5. CONCRETE TO BE MINIMUM 4,200 P.S.I.
6. LOCKING DEVICE IS REQUIRED ON ALL STORM SEWER LIDS.
7. "NO DUMPING" WARNING PLAQUE TO BE INSTALLED ON ALL STANDARD AND RECESSED INLETS.
8. CONCRETE CAST-IN-PLACE INLETS SHALL HAVE A MINIMUM COMPRESSIVE STRENGTH OF 4,200 P.S.I. @ 28 DAYS.
9. STORM DRAIN TILE SHALL BE PLACED IN THE CENTER OF THE INLET, 2 INCHES FROM THE EDGE OF OPENING AS SHOWN IN THE DRAWING. USE PL-200 CONSTRUCTION ADHESIVE FOR APPLICATION. TILES CAN BE ORDERED FROM: CENTERLINE SUPPLY, INC., 425 JESSE STREET, GRAND PRAIRIE, TEXAS 75061-1141. 1-800-321-1731, METRO: 214-647-8300, FAX: 214-641-1221.
10. EXISTING STORM SEWER PIPE AND/ OR LATERALS SHALL BE LOCATED PRIOR TO SETTING OF CONSTRUCTING INLET BOXES. IF ADJUSTMENT IN GRADE OF LATERAL IS REQUIRED, A REVISED DESIGN BY THE ENGINEER OF RECORD SHALL BE SUBMITTED TO THE CITY FOR APPROVAL.
11. REINFORCED CONCRETE PIPE CLASS III MINIMUM OR HIGH DENSITY POLYETHYLENE STORM SEWER PIPE IS APPROVED WITHIN THE CITY.

SANITARY SEWER

1. ALL SEWER LINES CROSSING POTABLE WATERLINES SHALL BE AS SHOWN IN THE PLANS AND MEET TNRCC REQUIREMENTS.
2. PIPES 6 INCHES THROUGH 15 INCHES SHALL BE IN ACCORDANCE WITH ASTM D3034 WITH A MINIMUM SDR OF 35 OR ASTM D3350 AND DE 345434 C.
3. PIPES LARGER THAN 12 INCHES THROUGH 48 INCHES SHALL BE IN ACCORDANCE WITH ASTM STANDARDS F679, F794, F949 AND D3350/ DE 345434 C.
4. MANHOLES SHALL BE CAST IN PLACE OR PRECAST. ALL MANHOLES SHALL BE WATER TIGHT. ALL RING AND COVERS SHALL INCLUDE AN INTERNAL CHIMNEY SEAL.
5. ALL PIPE OPENINGS IN MANHOLES SHALL INCLUDE COUPLINGS WITH "O" RING RUBBER GASKETS.
6. STUBOUTS OUT OF MANHOLES SHALL BE FITTED WITH A STOPPER AND CAP. STUBOUTS SHALL BE A MINIMUM OF 5 FEET FROM MANHOLE AND BE SUPPORTED BY A CONCRETE CRADLE.
7. ALL DROP MANHOLES SHALL BE OF THE EXTERNAL TYPE.
8. MANHOLES SHALL BE VENTED IN ACCORDANCE WITH TNRCC REQUIREMENTS.
9. ALL SANITARY SEWER PIPE SHALL BE TESTED (NCTCOG ITEM 6.7.2) AFTER CONSTRUCTION. TESTING SHALL INCLUDE PRESSURE TESTING, MANDREL TEST (TNRCC REQUIRED) AND COLOR TV INSPECTION. COLOR TV INSPECTION SHALL BE COMPLETED IN PRESENCE OF CITY REPRESENTATIVE AND THE ORIGINAL VHS FORMATTED TAPE SHALL BE GIVEN TO THE CITY AT THE COMPLETION OF THE INSPECTION.
10. MANHOLES SHALL BE VACUUM TESTED IN THE PRESENCE OF THE CITY REPRESENTATIVE.

DETAILS

SPECIAL DETAILS OR MODIFICATIONS TO THESE STANDARD DETAILS TO BE UTILIZED ON ANY GIVEN PROJECT SHALL BE SUBMITTED TO THE CITY FOR APPROVAL FOR USE.

WATER

1. ALL WATER LINE CROSSINGS OF SANITARY SEWER LINES SHALL BE AS SHOWN IN THE PLANS AND MEET TNRCC REQUIREMENTS.
2. PIPES 12 INCHES IN DIAMETER AND SMALLER SHALL BE POLYVINYL CHLORIDE (P.V.C.) MEETING THE REQUIREMENTS OF AWWA C900 DR 18 OR DUCTILE IRON PIPE (D.I.P.) MEETING THE REQUIREMENTS OF AWWA C 151 CLASS 50 PIPE. ALL D.I.P. SHALL BE WRAPPED WITH A POLYETHYLENE LINER.
3. FOR PIPES LARGER THAN 12 INCHES IN DIAMETER, THE PIPE SHALL BE REINFORCED CONCRETE CYLINDER PIPE (AWWA C301 OR AWWA C303), DUCTILE IRON PIPE (AWWA C151 CLASS 50) OR POLYVINYL CHLORIDE PIPE UP TO 18 INCHES MEETING THE REQUIREMENTS OF AWWA C905 – 235 P.S.I. RATED PIPE.
4. ALL VALVES ON PIPES 12 INCHES AND SMALLER SHALL BE RESILIENT SEALED WEDGE VALVES (AWWA C509).
5. ALL VALVES ON PIPES LARGER THAN 12 INCHES BUT SMALLER THAN 30 INCHES SHALL BE BUTTERFLY VALVES (AWWA C504) OR WEDGE VALVES (AWWA C509).
6. ALL VALVES ON PIPES 30 INCHES AND LARGER SHALL BE BUTTERFLY VALVES (AWWA C504).
7. EMBEDMENT SHALL BE AS SHOWN IN THE PLANS. BACKFILL WITHIN THE LIMITS OF EXISTING AND PROPOSED PAVEMENT SHALL BE COMPACTED TO 95% STANDARD PROCTOR. OUTSIDE PAVEMENT (EXISTING OR PROPOSED) SHALL BE COMPACTED TO MINIMUM OF 95% STANDARD PROCTOR. ALL COMPACTION SHALL BE BY MECHANICAL METHODS.
8. WATER LINES SHALL BE PRESSURE TESTED IN ACCORDANCE WITH NCTCOG ITEM 6.7.3..
9. ALL HORIZONTAL AND VERTICAL BENDS SHALL BE BLOCKED.

SCREENING WALLS

1. CONCRETE – MINIMUM COMPRESSIVE STRENGTH OF 3,000 P.S.I. @ 28 DAYS.
2. REINFORCEMENT – ASTM A-36.
3. MASONRY – COMPRESSIVE STRENGTH SHALL BE PRESCRIBED IN ITEM 2.3.6 SPECIAL PROVISIONS.
4. WIND LOAD FOR DESIGN – 20 P.S.F.
5. PIER BEARING STRESSES – SEE BRICK SCREENING WALL NOTES.
6. MORTAR – TYPE "S".
7. PROVIDE CONTROL JOINTS AT 50 FEET.
8. PROVIDE EXPANSION JOINTS AT 200 FEET CENTER MAXIMUM.
9. PROVIDE PIER WITH MINIMUM 9 FOOT W/ 24 INCH DIAMETER BELL IN CLAY OR OTHER MATERIAL EXCEPT BLUE SHALE, 6 FOOT MINIMUM WITH 3 FOOT MINIMUM INTO BLUE SHALE.
10. ALL EXPOSED CONCRETE SHALL BE CLASS 2 RUBBED FINISHED SURFACE.
11. SIDEWALKS ADJACENT TO WALLS MUST BE 5 FOOT MINIMUM WIDTH FROM ALL PORTIONS OF THE WALL (INCLUDING PILASTERS, COLUMNS, ETC.).
12. MAXIMUM PILASTER SPACING 40 FEET.
13. WALLS SHALL NOT BE PLACED IN THE VISIBILITY EASEMENT OR STREET RIGHT OF WAY.
14. THE WALL SHALL BE A MINIMUM OF EIGHT FEET IN HEIGHT AS MEASURED FROM THE NEAREST ALLEY EDGE OR SIDEWALK GRADE, WHICHEVER IS THE HIGHER. THE COLOR OF THE WALL SHALL BE LIMITED TO EARTH-TONE COLORS, EXCLUDING GRAY, GREEN AND WHITE. THE COLOR OF THE WALL SHALL BE UNIFORM ON EACH SIDE OF A THOROUGHFARE FOR THE ENTIRE LENGTH BETWEEN INTERSECTING THOROUGHFARES, UNLESS OTHERWISE APPROVED BY THE CITY'S PUBLIC WORKS DEPARTMENT. THE FINISH OF THE WALL SHALL BE CONSISTENT ON ALL SURFACES.
15. IF WROUGHT IRON FENCING IS TO BE UTILIZED ON REQUIRED SCREENING, ALL WROUGHT IRON MUST BE SOLID STOCK, NO TUBULAR STEEL WILL BE ALLOWED.

THESE DOCUMENTS ARE FOR BIDDING, CONSTRUCTION, AND PERMIT PURPOSES.

DATE: 2/2/00

STATE OF TEXAS — JOHN W. BIRKHOFF — 64137 — PROFESSIONAL ENGINEER

NO.	REVISION	BY	DATE

CITY OF LANCASTER, TEXAS

STANDARD CONSTRUCTION DETAILS

GENERAL NOTES

DATE: DECEMBER , 1999 — SHEET GN–00

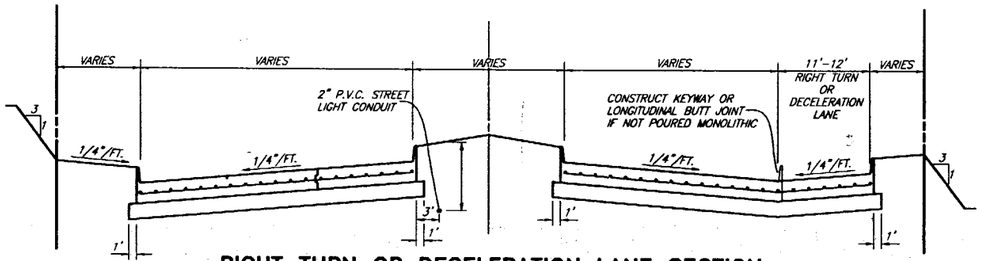

RIGHT TURN OR DECELERATION LANE SECTION

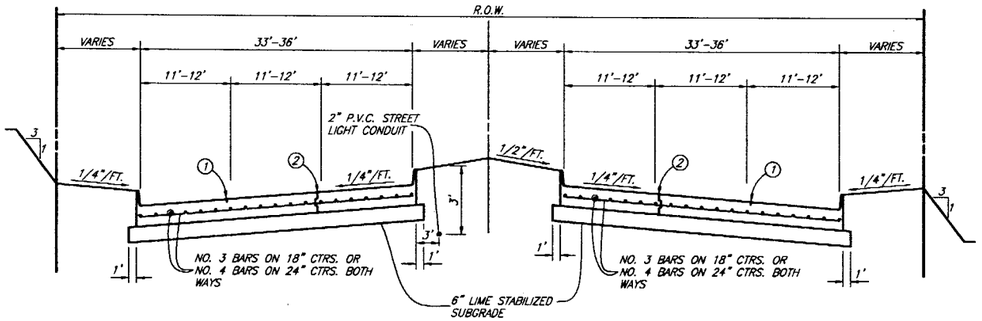

REGULAR SECTION

M6D & P6D

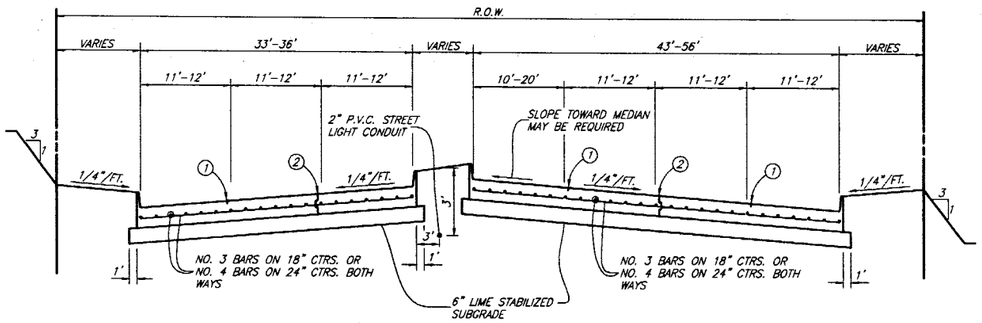

LEFT TURN SECTION

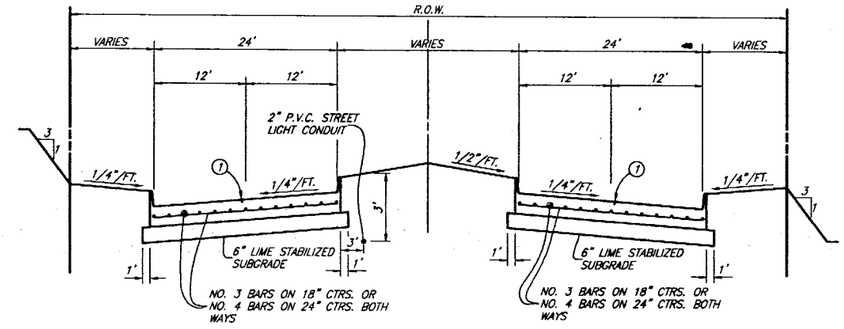

REGULAR SECTION

M4D

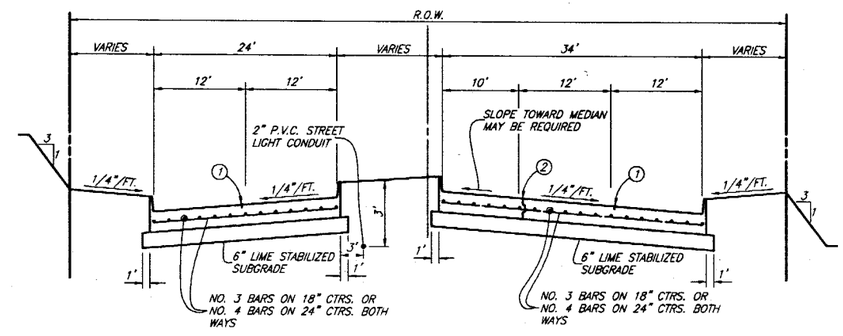

LEFT TURN SECTION

NOTE:
FOR RETROFIT TURN LANES AND MEDIAN OPENINGS. TWO ADDITIONAL INCHES OF CONCRETE CAN BE PLACED IN LIEU OF LIME STABILIZATION.

M60, P60, M4D SECTIONS SHALL HAVE MINIMUM PAVEMENT THICKNESS OF 8 INCHES.

LEGEND

1 – SAWED LONGITUDINAL DUMMY JOINT

A. CONSTRUCTION JOINT (FULL WIDTH PVMT. IS ALLOWED WHERE APPROVED BY CITY OF LANCASTER).

2 – B. DELETE IT WHEN PAVING IS 25 FT. WIDTH TO BE WIDENED IN FUTURE.

C. INSTALL CURB IF PAVING IS LESS THAN FULL WIDTH OF 33'-36'.

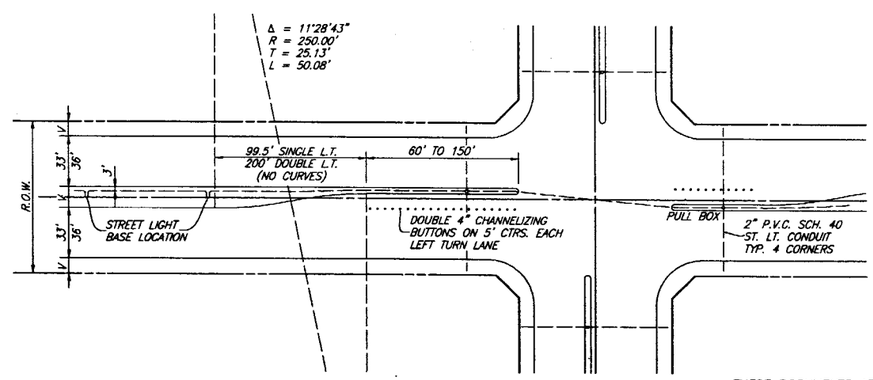

LEFT TURN PLAN

THESE DOCUMENTS ARE FOR BIDDING, CONSTRUCTION, AND PERMIT PURPOSES.

John W Birkhoff

DATE: 2/28/00

STATE OF TEXAS
JOHN W. BIRKHOFF
84137
REGISTERED
PROFESSIONAL ENGINEER

NO.	REVISION	BY	DATE

CITY OF LANCASTER, TEXAS

STANDARD CONSTRUCTION DETAILS

PAVING / SECTIONS

DATE: DECEMBER , 1999

SHEET STREET–01

PVMT-01.DWG 01/27/00 EWH BLOCKS: REG_SECT, LTURN_SECT, REG_SECT2, LTURN_SECT2, PVMT-PLAN, LEGEND_PVMT

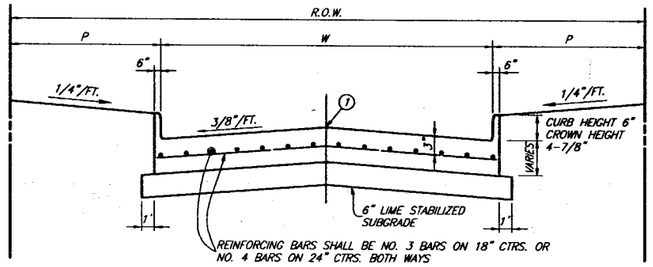

REGULAR SECTION

R2U
C2U

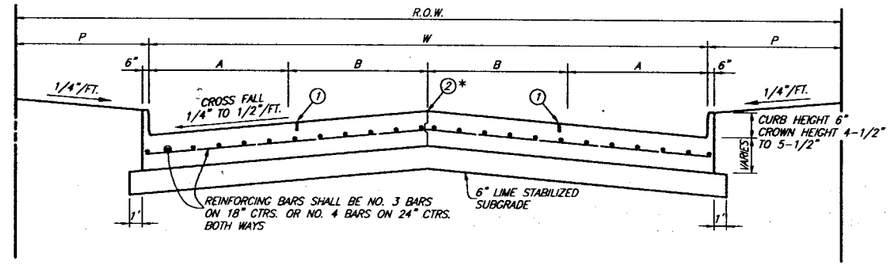

REGULAR SECTION

C4U
M4U
M5U

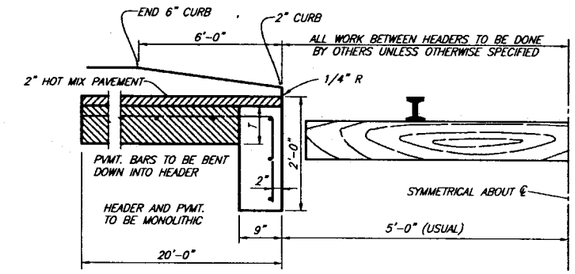

RAIL HEADER

LEGEND

1 - SAWED LONGITUDINAL DUMMY JOINT

2 - CONSTRUCTION JOINT (FULL WIDTH PVMT. IS ALLOWED WHERE APPROVED BY CITY OF LANCASTER)

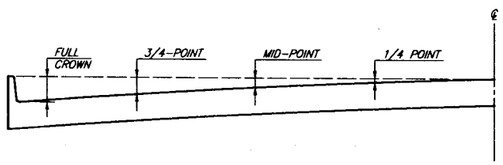

ROADWAY WIDTH (W)	TOTAL CROWN HEIGHT	3/4 POINT	MID-POINT	1/4 POINT
26'	4"	2-1/4"	1"	1/4"
36'	6"	3-3/8"	1-1/2"	3/8"
44'	6"	3-3/8"	1-1/2"	3/8"

TABLE OF CROWN HEIGHTS AND ORDINATES FOR VARIOUS PARABOLIC SECTIONS

SLIP-FORM PAVEMENT MUST MEET CROWN GRADES AT GUTTERS, AT MID-POINTS & ℄

PARABOLIC ROADS ONLY TO BE CONSTRUCTED WITH SLIP FORM PAVERS

R2U, C2U, C4U, M4U & M5U PAVING SECTIONS SHALL HAVE A MINIMUM PAVEMENT THICKNESS OF 6 INCHES.

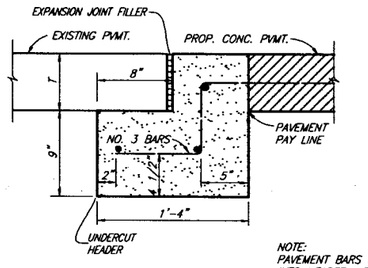

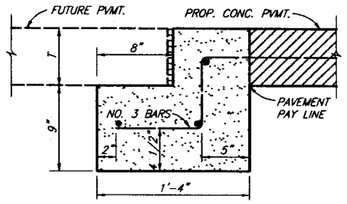

NOTE:
PAVEMENT BARS TO BE BENT DOWN INTO HEADER. PAVEMENT AND HEADER SHALL BE MONOLITHIC.

STREET HEADER

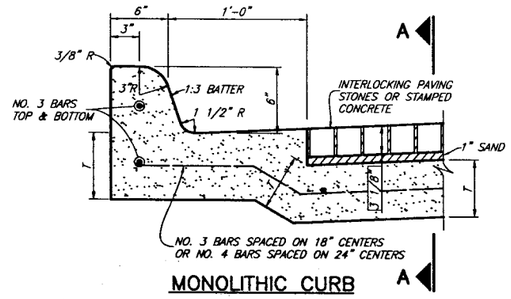

MONOLITHIC CURB

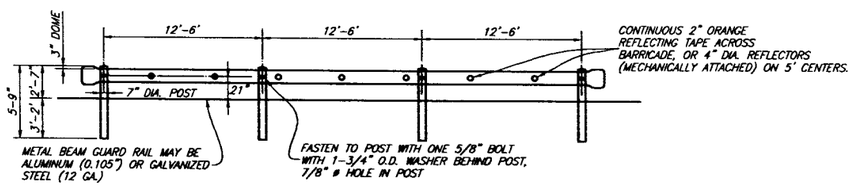

NON CONSTRUCTION BARRICADES (PERMANENT BARRICADES) SHALL CONSIST OF TxDOT GF(TD)-87 METAL BEAM GUARD FENCE WITH TERMINAL CONNECTOR SECTIONS AT EACH END. PERMANENT BARRICADES SHALL BE MANUFACTURED AND CONSTRUCTED IN ACCORDANCE WITH TxDOT DETAILS. BARRICADE SHALL EXTEND FROM OUTSIDE CURB TO OUTSIDE CURB.

TYPICAL PERMANENT BARRICADE DETAIL

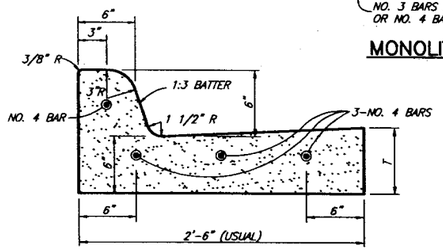

SEPARATE CURB AND GUTTER

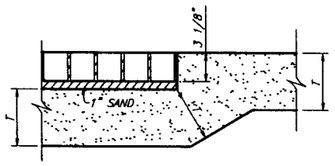

SECTION A-A

PAVING STONES SHALL BE PER NCTCOG ITEMS 2.3.7 AND 5.8 OF SPECIAL PROVISIONS

CURB AND CURB AND GUTTER

THESE DOCUMENTS ARE FOR BIDDING, CONSTRUCTION, AND PERMIT PURPOSES.

John W. Birkhoff

DATE: 2/2/00

STATE OF TEXAS
JOHN W. BIRKHOFF
54437
REGISTERED PROFESSIONAL ENGINEER

NO.	REVISION	BY	DATE

CITY OF LANCASTER, TEXAS

STANDARD CONSTRUCTION DETAILS

PAVING / SECTIONS / DETAILS

DATE: DECEMBER , 1999

SHEET STREET-02

BLOCKS: PARA_SECT, PARA-TABLE, PERM-BARRICADE, RR-Header, Header, CURB-GUT

01/27/00 EWH

PAVT-02.DWG

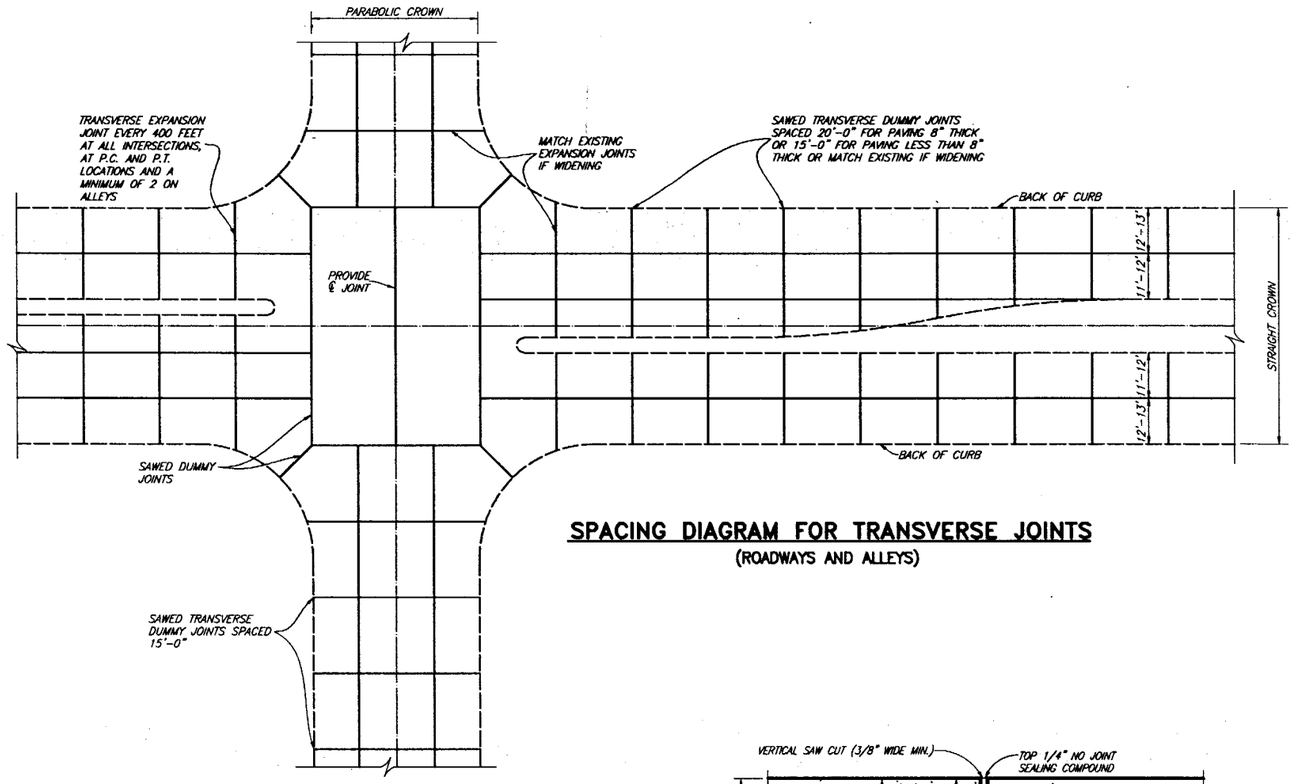

SPACING DIAGRAM FOR TRANSVERSE JOINTS

(ROADWAYS AND ALLEYS)

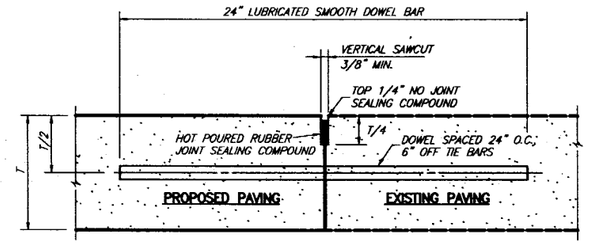

NOTE:

1. T-8" AND GREATER NO. 6 BAR, T-6" AND LESS NO. 5 BAR
2. LONGITUDINAL BUTT CONSTRUCTION MAY BE UTILIZED IN PLACE OF LONGITUDINAL HINGED (KEYWAY) JOINT AT CONTRACTORS OPTION.
3. DOWEL BARS SHALL BE DRILLED INTO PAVEMENT HORIZONTALLY BY USE OF A MECHANICAL RIG. HAND DRILLING NOT ACCEPTABLE. DAMAGE TO EXISTING PAVEMENT SHALL BE REMOVED BY CONTRACTOR AND JOINT CONSTRUCTED AT CONTRACTORS EXPENSE.
4. DOWEL BAR SHOWN IS IN ADDITION TO TIE BARS (12" O.C.-6" OFF DOWELS).
5. TIE BARS SHALL BE NO. 5 BAR DEFORMED. TIE BAR SHALL HAVE A LENGTH OF 24 INCHES.

LONGITUDINAL BUTT JOINT

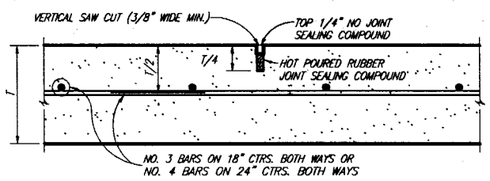

TRANSVERSE JOINTS SPACED 15 FT. C.-C. (MAX.)
LONGITUDINAL JOINTS SPACED 20 FT. C.-C. (MAX.)

SAWED DUMMY JOINT

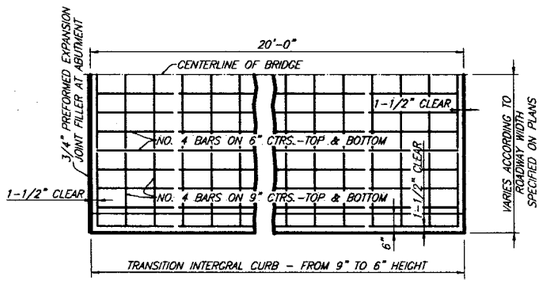

PLAN

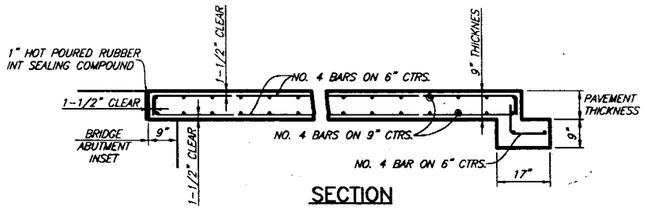

SECTION

BRIDGE APPROACH SLAB

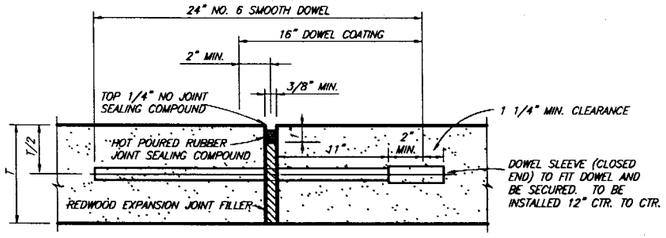

TRANSVERSE EXPANSION JOINT NOTES:

1. DOWELS AND REINFORCING BARS SHALL BE SUPPORTED BY AN APPROVED DEVICE.
2. TRANSVERSE EXPANSION JOINTS SHALL BE SPACED AT 400 FT. MAXIMUM AND AT ALL INTERSECTIONS.

TRANSVERSE EXPANSION JOINT

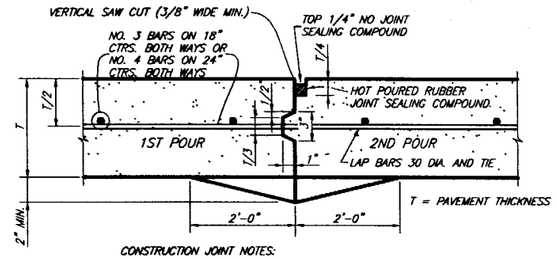

CONSTRUCTION JOINT NOTES:

1. CONTRACTOR SHALL PROTECT KEYWAY PRIOR TO SECOND POUR. IF LONGITUDINAL KEYWAY IS DAMAGED, CONTRACTOR SHALL REPAIR WITH THE USE OF LONGITUDINAL BUTT JOINT (DRILL DOWELS INTO FIRST POUR).
2. THICKENED EDGES ARE REQUIRED FOR FUTURE WIDENING ONLY.

CONSTRUCTION JOINT

THESE DOCUMENTS ARE FOR BIDDING, CONSTRUCTION, AND PERMIT PURPOSES.

DATE: 2/2/00

STATE OF TEXAS — JOHN W. BIRKHOFF — 54137 — REGISTERED PROFESSIONAL ENGINEER

NO.	REVISION	BY	DATE

CITY OF LANCASTER, TEXAS

STANDARD CONSTRUCTION DETAILS

PAVING / JOINTS

DATE: DECEMBER , 1999

SHEET STREET-03

BLOCKS: JOINT-SPACING, EXPJNT, DUMMYJNT, CONSTJNT, BUTTJNT, APPROACHSLAB.

01/27/00 EWH

PVMT-03.DWG

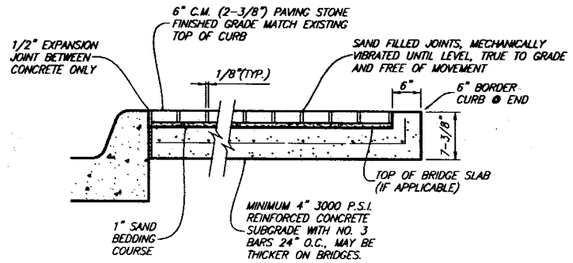

TYPICAL CROSS SECTION

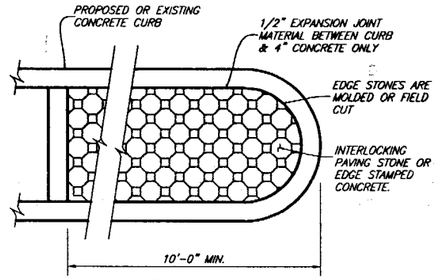

PLAN

MEDIAN PAVING SHALL EXTEND TO A POINT WHERE MEDIAN IS 6' WIDE. IF MEDIAN IS 6' WIDE, SHALL EXTEND 15' FROM NOSE. FOR MEDIANS WIDER THAN 6', PAVING SHALL EXTEND 10' FROM NOSE. ALL DISTANCES ARE MINIMUM.

STAMPED CONCRETE OR INTERLOCKING PAVING STONE

COLOR AND STYLE TO BE SELECTED BY CITY

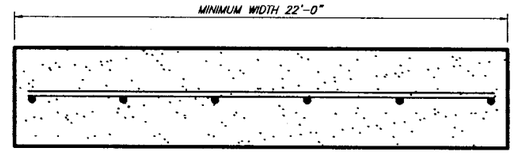

1. ALL FIRE LANES SHALL BE PAVED WITH A MINIMUM OF 8 INCHES OF 3000 P.S.I. CONCRETE REINFORCED WITH #3 REBAR PLACED ON 18 INCH CENTERS EACH WAY ON A 6 INCH LIME STABILIZED SUBGRADE THE SUBGRADE SHALL BE STABILIZED WITH HYDRATED LIME IN SUFFICIENT AMOUNT TO REDUCE THE PLASTICITY INDEX BELOW FIFTEEN (15). IF NO LABORATORY CONTROL IS USED, THE AMOUNT OF LIME SHALL BE EQUAL TO SEVEN AND ONE HALF (7-1/2) PERCENT BY UNIT DRY WEIGHT OF SOIL ESTIMATED AT 75 POUNDS PER CUBIC FEET OF 32 POUNDS OF LIME PER SQUARE YARD OF SURFACE AREA TREATED TO A 6 INCH THICKNESS.

2. ALL FIRE LANES MAY BE PAVED WITH 6 INCHES OF 3000 P.S.I. CONCRETE (28 DAYS COMPRESSIVE STRENGTH) REINFORCED WITH #3 REBAR PLACED ON 18 INCH CENTERS EACH WAY ON A SUBGRADE SCARIFIED AND COMPACTED TO AT LEAST 95% STANDARD PROCTOR DENSITY. CONTRACTION JOINTS SHALL BE SPACED AT A MAXIMUM OF 15.5 FEET ON CENTERS EACH WAY. CONTRACTION JOINTS MAY BE DUMMY OR SAWED JOINTS T A DEPTH OF AT LEAST ONE (1) INCH DEEP. TO INSURE PROPER RUNOFF IN ORDER TO PREVENT PONDING, THE PAVEMENT SURFACE SHOULD HAVE A MINIMUM SLOPE OF 1%(12" PER 100 FEET.).

3. ALTERNATE PAVING DESIGN:
IN LIEU OF ITEMS LISTED ABOVE, THE DEVELOPER MAY SUBMIT AN ENGINEERED DESIGN THAT WILL BE EQUIVALENT IN PERFORMANCE OF THE SPECIFICATIONS ABOVE. THE EQUIVALENT DESIGN MUST TAKE INTO ACCOUNT THE SOIL CONDITIONS OF THE SITE TO BE DEVELOPED. SUCH DESIGN SHALL REQUIRE APPROVAL BY PUBLIC WORKS DIRECTOR.

FIRE LANE PAVING & JOINT DETAIL

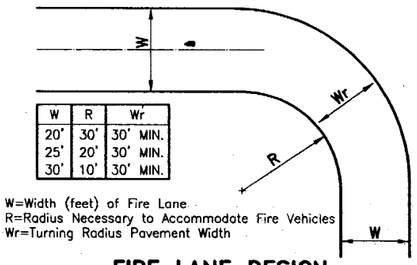

W	R	Wr
20'	30'	30' MIN.
25'	20'	30' MIN.
30'	10'	30' MIN.

W=Width (feet) of Fire Lane
R=Radius Necessary to Accommodate Fire Vehicles
Wr=Turning Radius Pavement Width

FIRE LANE DESIGN

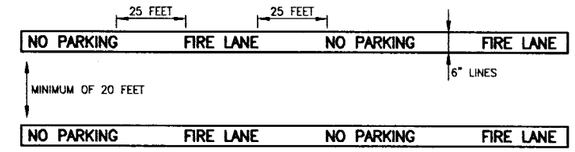

1. THE FIRE CHIEF IS AUTHORIZED TO DESIGNATE FIRE LANES.
2. FIRE LANES SHALL BE MARKED BY SIX INCH (6") WIDE LINES USING RED TRAFFIC PAINT, WITH THE WORDING "NO PARKING" AND "FIRE LANE" PAINTED ON THE LINES AT INTERVALS OF TWENTY-FIVE (25'). THE LETTERING WILL BE FOUR INCHES (4") HIGH WITH A ONE INCH (1") WIDE STROKE PAINTED WITH WHITE TRAFFIC PAINT.
3. FIRE LANES SHALL BE A MINIMUM OF TWENTY-FEET (20') IN WIDTH.
4. ANY DEAD-END FIRE LANE MORE THAN ONE HUNDRED FIFTY-FEET (150') LONG SHALL PROVIDE A TURN AROUND OF ONE HUNDRED FEET (100') IN DIAMETER AT THE CLOSED END, IN ACCORDANCE WITH THE CITY OF LANCASTER CUL-DE-SAC PLAN DRAWING NO. 6F-7.

FIRE LANE MARKING

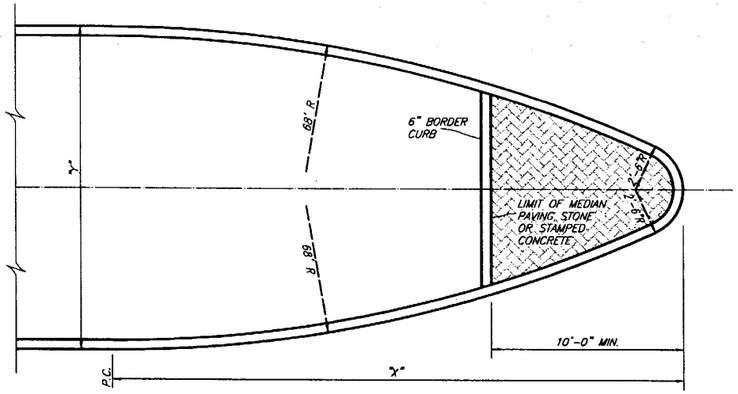

DETAIL OF NOSE FOR MEDIAN ISLAND

DIMENSIONS OF MEDIAN NOSE

X = 13.90'	Y = 7.0'	X = 26.36'	Y = 14.0'
X = 16.44'	Y = 8.0'	X = 29.89'	Y = 17.0'
X = 18.06'	Y = 9.0'	X = 32.93'	Y = 20.0'
X = 20.42'	Y = 10.0'	X = 36.47'	Y = 24.0'

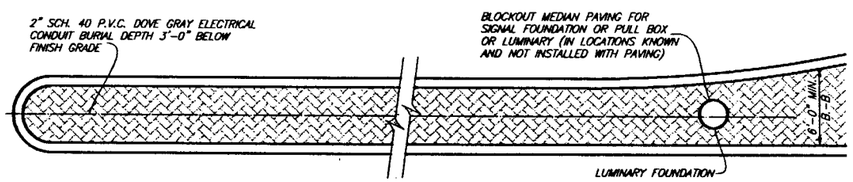

DETAIL OF MEDIAN PAVEMENT

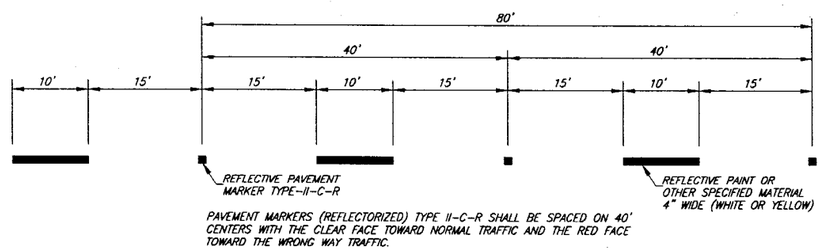

PAVEMENT MARKERS (REFLECTORIZED) TYPE II-C-R SHALL BE SPACED ON 40' CENTERS WITH THE CLEAR FACE TOWARD NORMAL TRAFFIC AND THE RED FACE TOWARD THE WRONG WAY TRAFFIC.

LANE LINE PAVEMENT MARKING

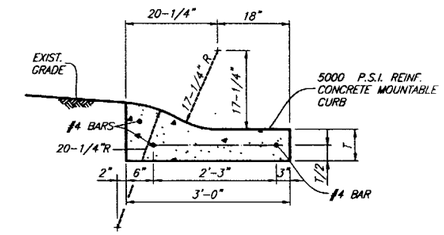

MOUNTABLE CURB SECTION

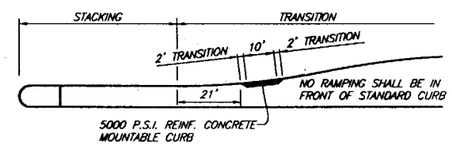

MOUNTALBE CURB DETAIL-PLAN VIEW

LANDSCAPE MAINTENANCE RAMP

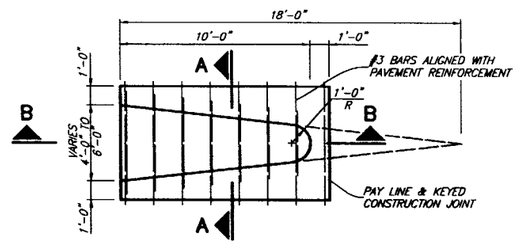

PLAN

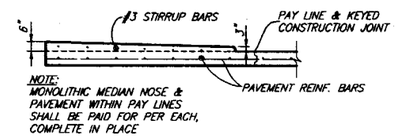

NOTE:
MONOLITHIC MEDIAN NOSE & PAVEMENT WITHIN PAY LINES SHALL BE PAID FOR PER EACH, COMPLETE IN PLACE

SECTION B-B

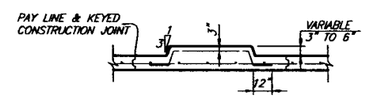

SECTION A-A

MONOLITHIC MEDIAN NOSE

THESE DOCUMENTS ARE FOR BIDDING, CONSTRUCTION, AND PERMIT PURPOSES

DATE: 2/2/00

STATE OF TEXAS — JOHN W. BIRCHOFF — 54137 — REGISTERED PROFESSIONAL ENGINEER

NO.	REVISION	BY	DATE

CITY OF LANCASTER, TEXAS

STANDARD CONSTRUCTION DETAILS

PAVING / DETAILS

DATE: DECEMBER , 1999

SHEET STREET-04

BLOCKS: MEDIAN_STONE, MEDIAN_DTL, FIRELANEJNT, FIRELANE, MARKING, MONO_MEDIAN, LANDSCAPE_RAMP

01/27/00 EWH

PVMT-04.DWG

ALLEY WIDTH (A)	HALF WIDTH (L)
12'	6'
16'	8'
20'	10'

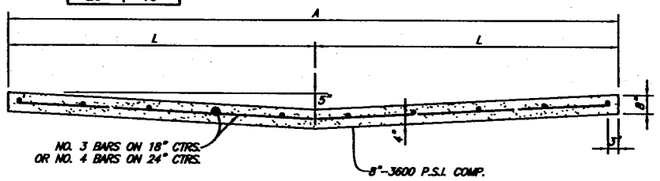

STANDARD 12, 16' & 20' ALLEY SECTION

ALLEY WIDTH	A	B	C	D
12'	12'	2'-6"	17'	12'
16'	16'	2'-6"	21'	16'
20'	20'	2'-6"	25'	20'

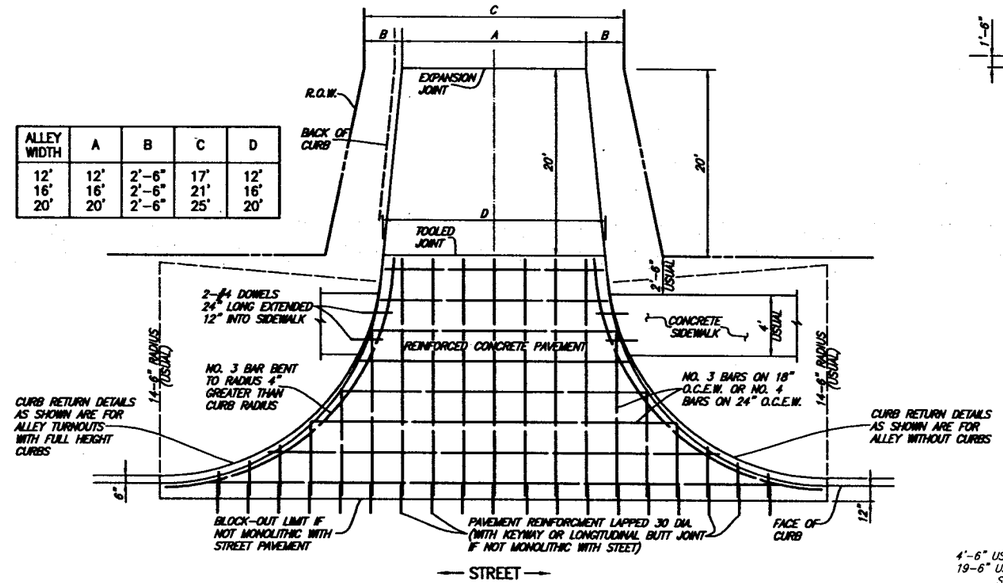

ALLEY RETURN DETAILS

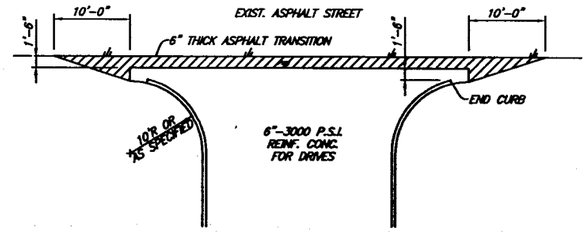

TYPICAL DRIVE OR STREET CONNECTION TO EXISTING ASPHALT STREET

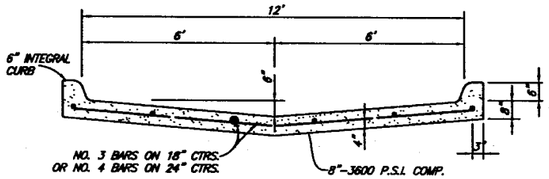

STANDARD ALLEY SECTION WITH CURBS

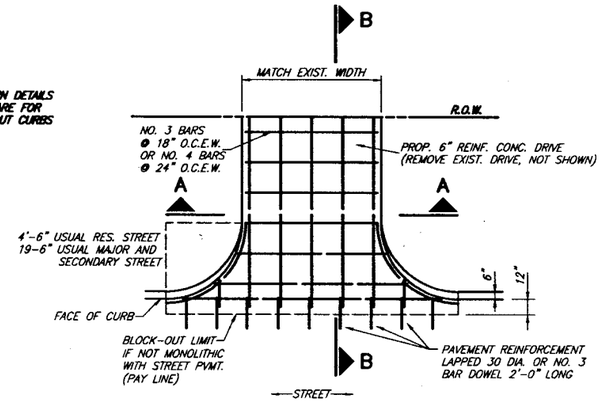

DRIVEWAY RETURN TO STREET

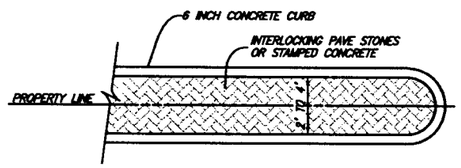

MEDIAN AT DRIVEWAYS SPLIT BY PROPERTY LINE

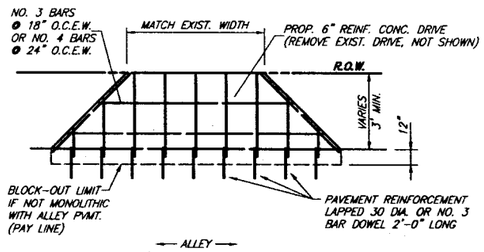

DRIVEWAY RETURN TO ALLEY

NOTE:
FINISHED GRADING WITHIN THE R.O.W. SHALL BE BROADCAST SEEDED. WHERE PROPOSED DRIVEWAY CONSTRUCTION GOES BEYOND THE R.O.W. AND INTO PRIVATE PROPERTY, THE FINISHED GRADING SHALL BE BLOCK SODDED TO RESTORE THE LANDSCAPING TO ITS PRE-CONSTRUCTION APPEARANCE.

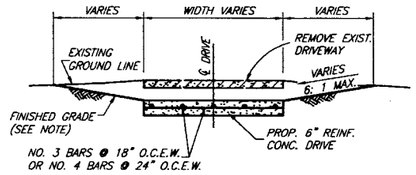

SECTION A-A

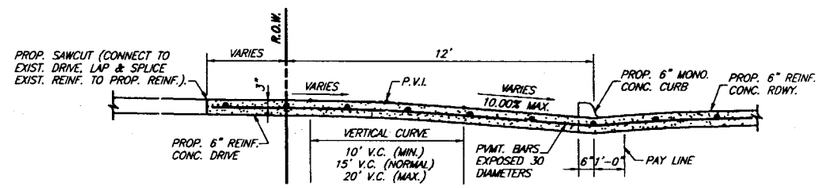

SECTION B-B

DRIVEWAY RETURN SECTIONS

THESE DOCUMENTS ARE FOR BIDDING, CONSTRUCTION, AND PERMIT PURPOSES.

DATE: 2/2/00

STATE OF TEXAS
JOHN W. BIRKHOFF
54137
REGISTERED PROFESSIONAL ENGINEER

NO.	REVISION	BY	DATE

CITY OF LANCASTER, TEXAS

STANDARD CONSTRUCTION DETAILS

PAVING / ALLEY / DRIVEWAYS

DATE: DECEMBER , 1999

SHEET STREET-05

BLOCKS: STDALLEY2, STDALLEY, DriveDtl3, ALLEY_DTL, DriveDtl2, DRIVE_CON, DRIVEDTL

01/27/00 EWH

PVMT-05.DWG

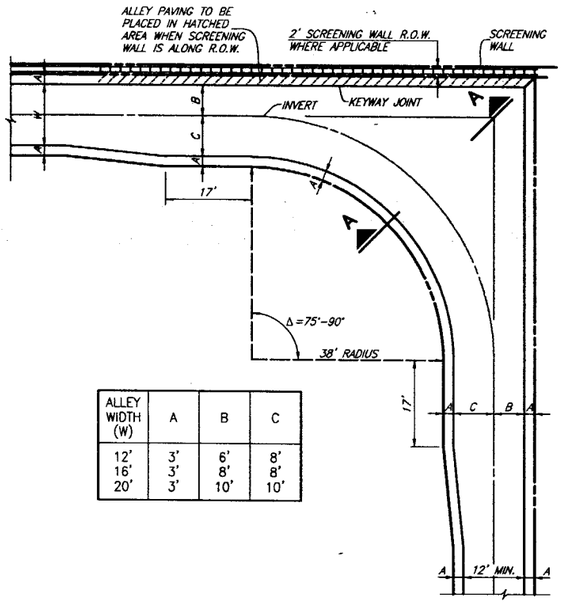

ALLEY WIDTH (W)	A	B	C
12'	3'	6'	8'
16'	3'	8'	8'
20'	3'	10'	10'

ALLEY TURN FOR Δ = 75°-90°

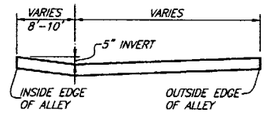

SECTION A-A

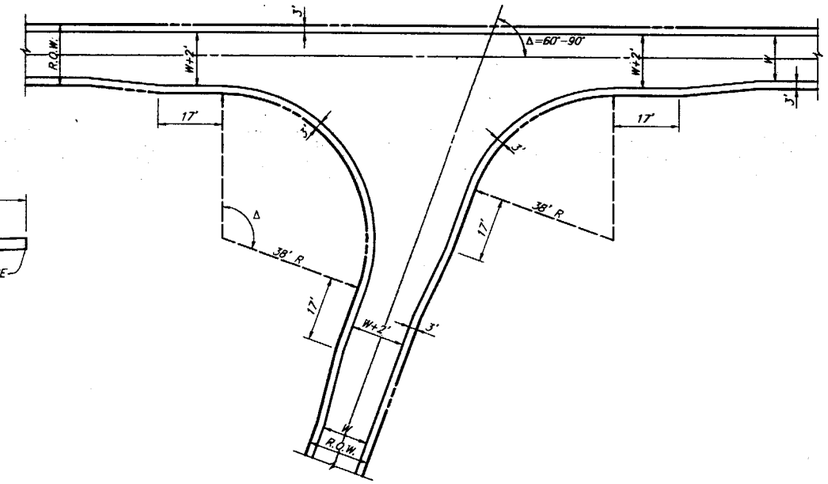

ALLEY TURN FOR Δ > 90°

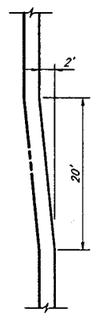

DETAIL "A"

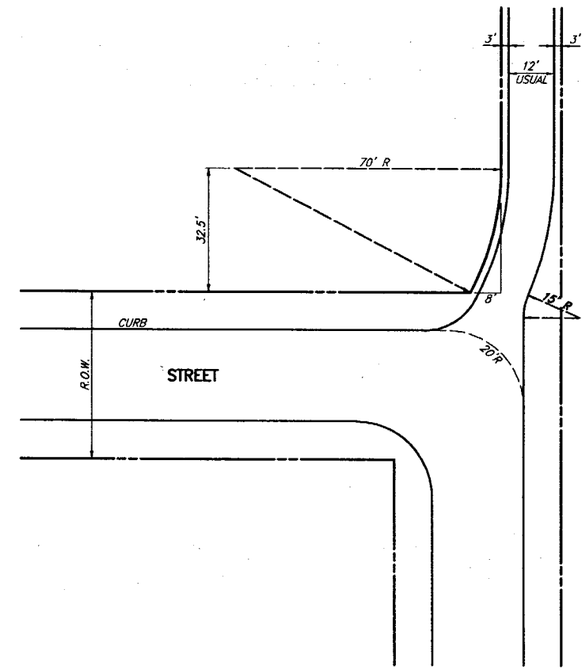

ALLEY / STREET INSERSECTION

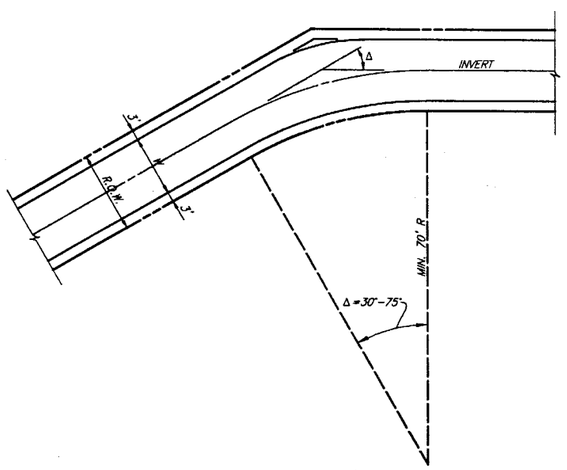

ALLEY TURN FOR Δ = 30°-75°

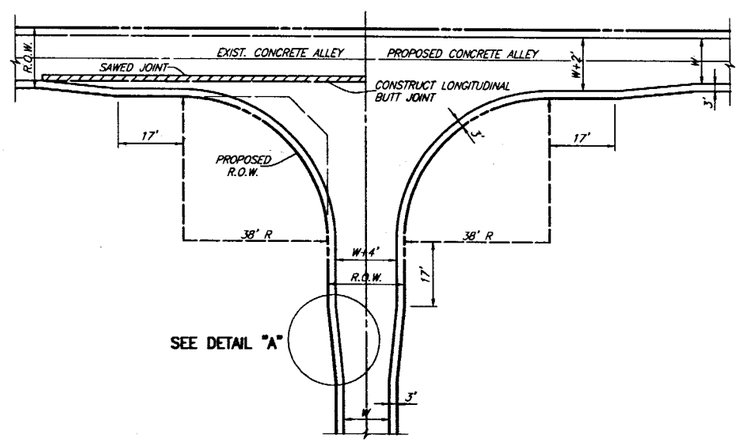

ALLEY INSERSECTING ALLEY

THESE DOCUMENTS ARE FOR BIDDING, CONSTRUCTION, AND PERMIT PURPOSES.

DATE: 2/2/00

STATE OF TEXAS — JOHN W. BIRGHOFF — 54137 — REGISTERED PROFESSIONAL ENGINEER

NO.	REVISION	BY	DATE

CITY OF LANCASTER, TEXAS

STANDARD CONSTRUCTION DETAILS

PAVING / RADIUS

DATE: DECEMBER , 1999

SHEET STREET-06

PVMT-06.DWG 01/27/00 EWH BLOCKS: ALLEY_TURN3, ALLEY_SECA, ALLEY_DTLA, ALLEY_TURN1, ALLEY_TURN2, ALLEY_ALLEY, ALLEY_ST

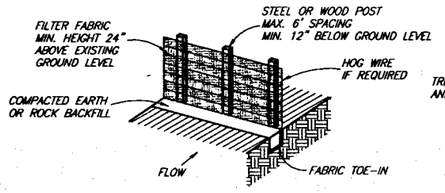

ISOMETRIC VIEW

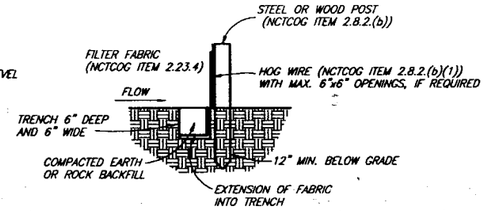

SECTION VIEW

SILT FENCE DETAIL

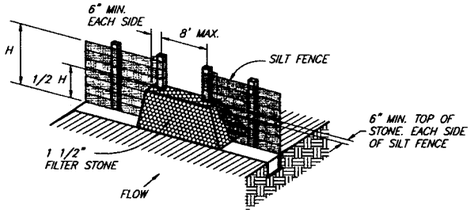

STONE OVERFLOW STRUCTURE

LOCATION AS CALLED FOR IN PLANS

NOTES:

1) THE CONTRACTOR SHALL INSPECT SILT FENCE WEEKLY AND AFTER MAJOR RAIN EVENTS TO ENSURE THAT THE DEVICE IS FUNCTIONING PROPERLY AND MAINTAIN IN ACCORDANCE WITH NCTCOG ITEM 3.12.

2) THE CONTRACTOR SHALL REMOVE SEDIMENT FROM BEHIND FENCE WHEN THE DEPTH OF SEDIMENT HAS BUILT UP TO ONE-THIRD THE HEIGHT OF THE FENCE ABOVE GRADE.

3) THE CONTRACTOR SHALL INSPECT THE BASE OF THE FENCE TO ENSURE THAT NO GAPS HAVE DEVELOPED AND RE-TRENCH AS NECESSARY.

4) THE CONTRACTOR SHALL INSPECT FENCE POSTS TO ENSURE THAT THEY ARE PROPERLY SUPPORTING THE FENCE. IF NECESSARY, THE CONTRACTOR SHALL RESET AND ADD POSTS.

5) IF FILTER FABRIC IS RIPPED, DAMAGED OR DETERIORATED, THE CONTRACTOR SHALL REPLACE IT IN ACCORDANCE WITH THE ORIGINAL SPECIFICATIONS AND DETAILS. (MAINTENANCE OF THE SILT FENCE SHALL BE AT THE CONTRACTORS OWN EXPENSE)

EROSION CONTROL

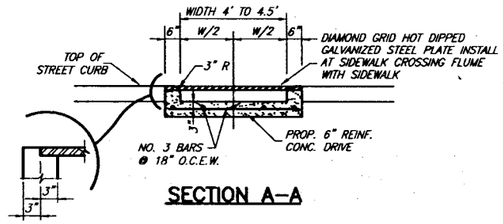

SECTION A-A

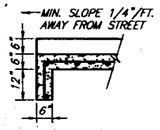

SECTION B-B

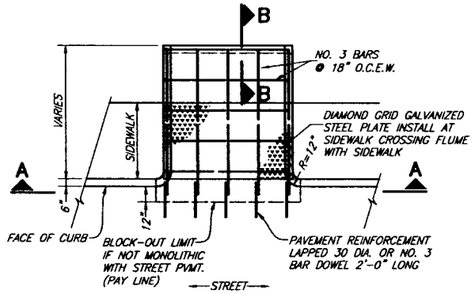

PLAN

STEEL PLATE FLUME COVER

PLATE THICKNESS SHALL BE 5/8 INCHES BASE ON 100 P.S.I. LIVE LOAD AND MAX. DEAD & LIVE LOAD DEFLECTION OF 1/240. BOLT PLATE DOWN WITH BRASS BOLTS. BOLTS SHALL BE 1/2" DIA. RECESSED TO FLUSH WITH TOP OF PLATE AND SPACED A MAXIMUM OF 12" ON CENTERS. 1/2" DIA. SELF-DRILLING ANCHORS SHALL BE USED AND SPACED THE SAME. SURFACE OF PLATE SHALL BE A NON-SKID MATERIAL.

REINFORCED CONCRETE FLUME WITH CURBS

SECTION A-A

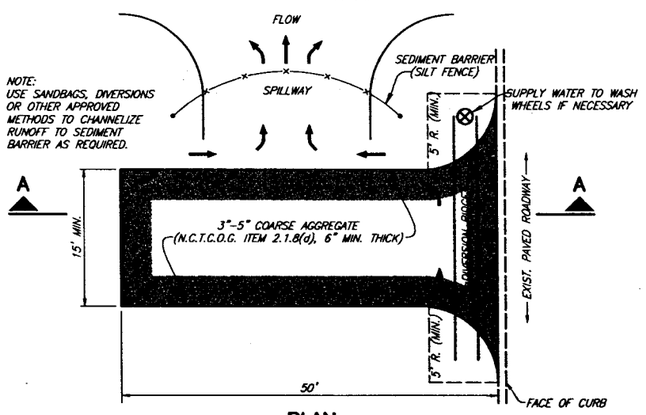

PLAN

CONSTRUCTION ENTRANCE ROAD FOR EROSION CONTROL

NO SCALE

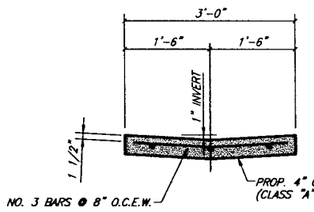

NOTES:
1. ALL VISIBLE SURFACES SHALL BE A TROWEL FINISH.
2. 3/4" CHAMFER REQUIRED ON ALL CORNERS.

REINFORCED CONCRETE FLUME WITHOUT CURBS

THESE DOCUMENTS ARE FOR BIDDING, CONSTRUCTION, AND PERMIT PURPOSES

DATE: 2/2/00

STATE OF TEXAS
JOHN W. BIRKHOFF
84137
REGISTERED
PROFESSIONAL ENGINEER

NO.	REVISION	BY	DATE

CITY OF LANCASTER, TEXAS

STANDARD CONSTRUCTION DETAILS

PAVING / DETAILS / EROSION

DATE: DECEMBER , 1999

SHEET STREET-07

BLOCKS: SILT-DTL, FLUME, FLUMESEC, Entrance

01/27/00 EWH

PVMT-07.DWG

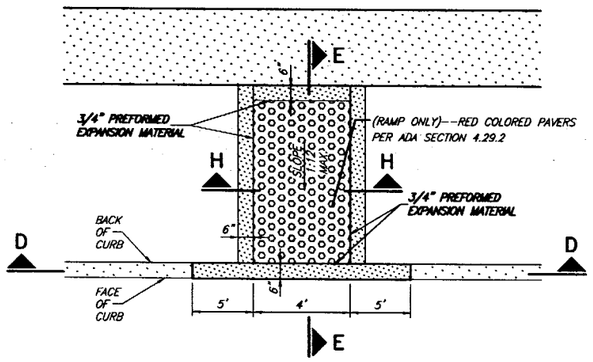

BARRIER FREE RAMP @ STRAIGHT CURB

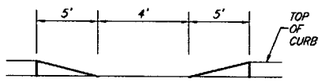

SECTION D-D

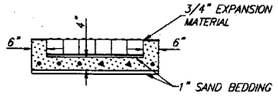

SECTION H-H

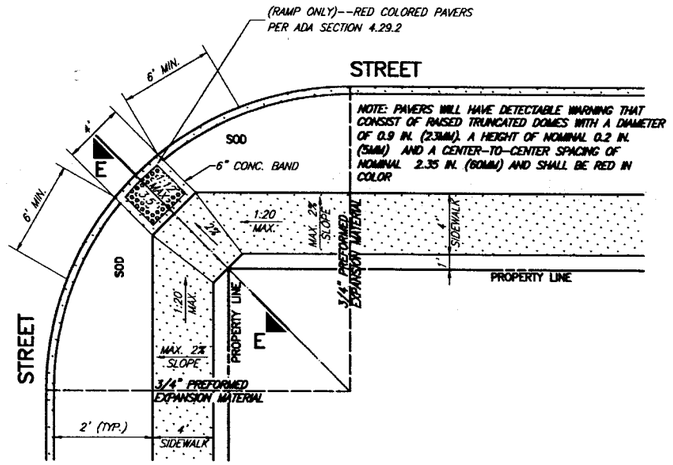

RAMP FOR 4 FEET SIDEWALK AWAY FROM CURB

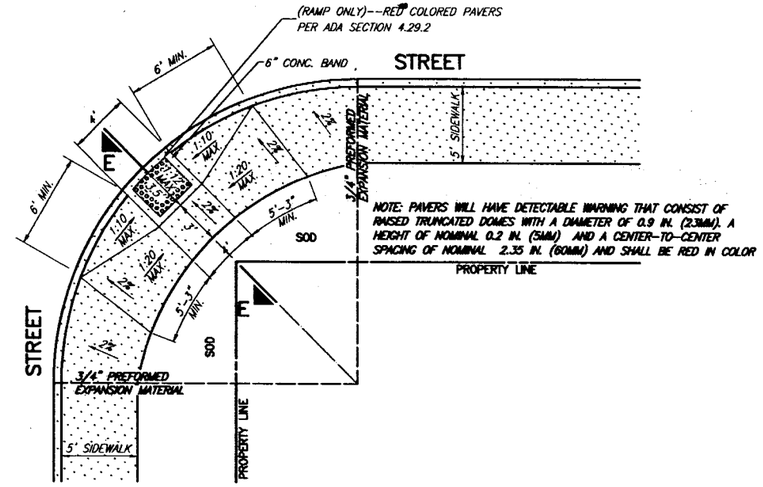

RAMP FOR 5 FEET SIDEWALK NEXT TO CURB

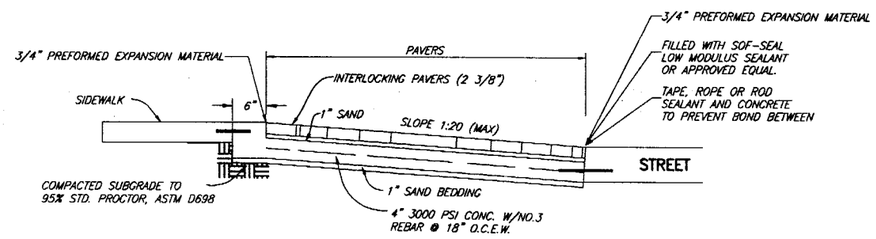

SECTION E-E

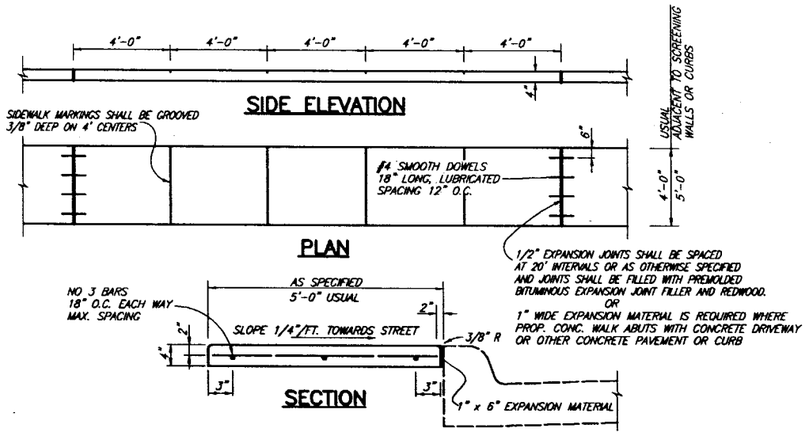

REINFORCED CONCRETE SIDEWALK

THESE DOCUMENTS ARE FOR BIDDING, CONSTRUCTION, AND PERMIT PURPOSES

DATE: 2/2/00

STATE OF TEXAS
JOHN W. BIRKHOFF
54137
REGISTERED PROFESSIONAL ENGINEER

NO.	REVISION	BY	DATE

CITY OF LANCASTER, TEXAS

STANDARD CONSTRUCTION DETAILS

PAVING / SIDEWALKS

DATE: DECEMBER , 1999

SHEET STREET-08

PVMT-08.DWG 01/27/00 EWH BLOCKS: BARRIER_FREE, Sidewalk

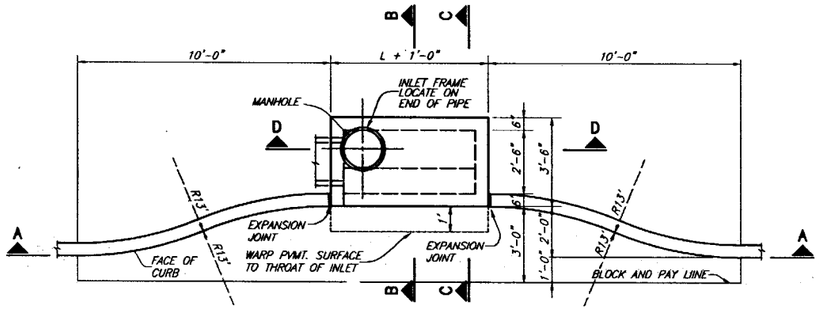

PLAN – RECESSED INLET

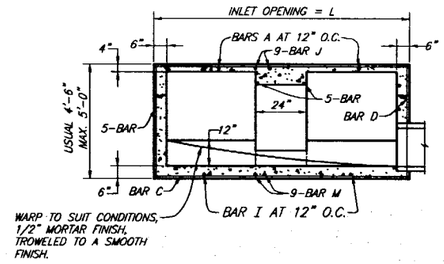

SECTION A–A – STANDARD AND RECESSED INLETS

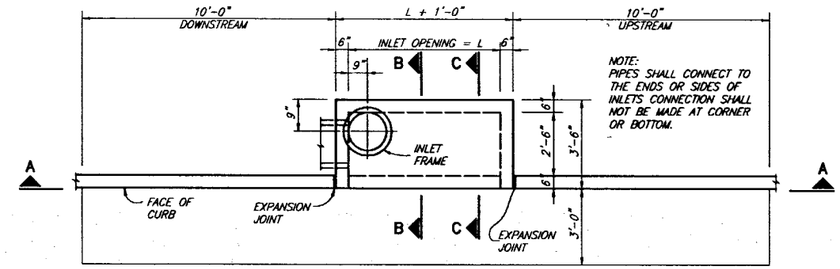

PLAN – STANDARD INLET

4, 6, 8 AND 10 FOOT INLETS

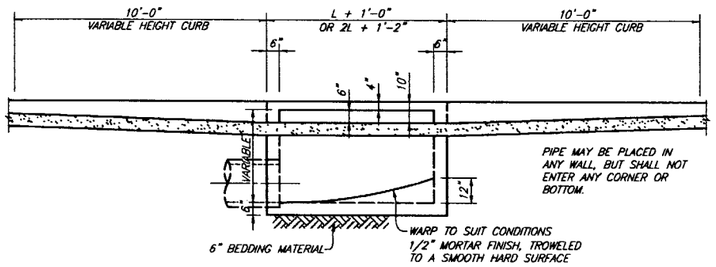

SECTION A–A–RECESSED AND STANDARD INLETS

4, 6, 8, AND 10 FOOT INLETS

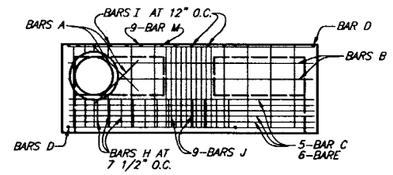

PLAN – STANDARD INLET

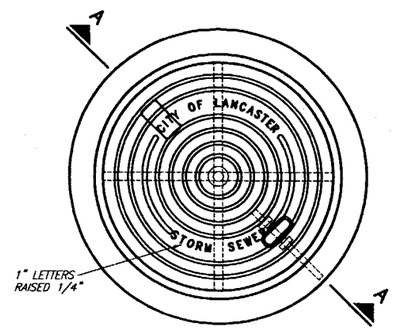

NOTE: MANHOLE COVER TO INCLUDE LOCKING DEVICE

PLAN OF COVER

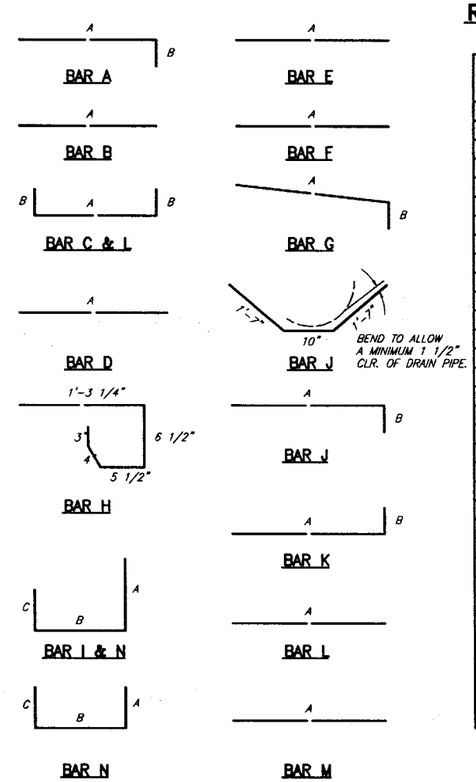

BAR DIAGRAMS

REINFORCING STEEL SCHEDULE

DIMENSIONS SHOWN ARE FOR MAXIMUM SIZE INLETS

INLET LENGTH	BAR TYPE	BAR DIA. (1/8 IN.)	NO. REQ'D	BAR DIMENSIONS		
				A	B	C
4	A	3	6	3'-2"	0'-3"	–
	B	3	1	2'-10"	–	–
	C	4	15	4'-8"	0'-6"	–
	D	4	5	4'-8"	–	–
	F	4	1	3'-2"	–	–
	G	3	5	2'-0"	1'-3"	–
	H	3	6	*	*	*
	N	3	3	3'-2"	3'-2"	3'-2"
6	A	3	9	3'-2"	0'-3"	–
	B	3	1	4'-10"	–	–
	C	4	15	6'-8"	0'-6"	–
	D	4	5	4'-8"	–	–
	F	4	1	3'-2"	–	–
	G	3	5	2'-0"	1'-3"	–
	H	3	9	*	*	*
	N	3	3	3'-2"	3'-2"	3'-2"
8	A	3	12	3'-2"	0'-3'	–
	B	4	1	6'-10"	–	–
	C	4	15	8'-8"	0'-6"	–
	D	4	5	4'-8"	–	–
	F	4	1	3'-2"	–	–
	G	3	5	2'-0'	1'-3"	–
	H	3	12	*	*	*
	N	3	3	3'-2"	3'-2"	3'-2"
10	A	3	13	3'-2"	0'-3'	–
	B	3	2	8'-10"	–	–
	C	4	16	10'-8"	0'-6"	–
	D	4	4	4'-8"	–	–
	E	5	6	10'-8"	–	–
	G	3	5	2'-0"	1'-3"	–
	H	3	14	*	*	*
	I	4	8	4'-8"	3'-2"	3'-2"
	L	4	5	4'-3"	–	–

* SEE DIAGRAM FOR DIMENSIONS. 4', 6', 8' AND 10' INLETS

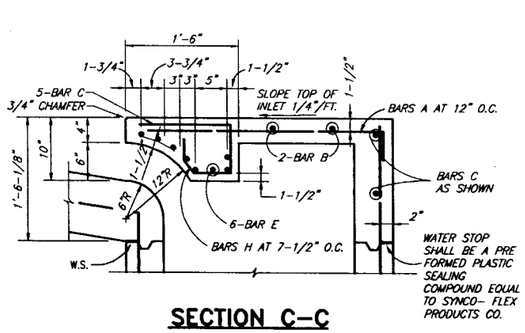

SECTION C–C

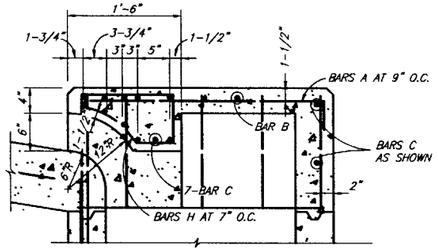

NOTE: FOR ADDITIONAL INFORMATION SEE SECTION C–C

SECTION E–E

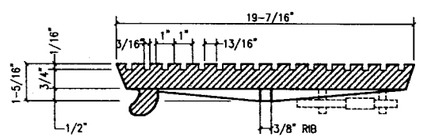

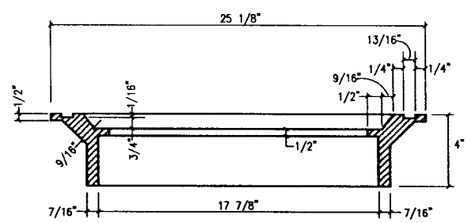

SECTION OF FRAME AND COVER SECTION A–A

INLET FRAME AND COVER

BASS & HAYS COVER 55#, FRAME 45# OR EQUAL

NOTES:

1. THE FLOOR OF THE EXCAVATION FOR INLET BOX MUST PROVIDE A FIRM, LEVEL BED FOR THE BASE SECTION TO REST UPON.
2. A MINIMUM OF 6 INCHES OF 1" DIAMETER (MAXIMUM) ROCK OR GRAVEL SHALL BE USED TO PREPARE THE BEDDING TO FINAL GRADE OR LIEU OF THIS, AT LEAST 6 INCHES OF 2-SACK CEMENT STABILIZED SAND SHALL BE USED TO PREPARE THE BEDDING TO GRADE. CEMENT STABILIZED-SAND SHALL BE ALLOWED TO SET BY KEEPING HOLE PUMPED DRY.
3. AFTER CASING HAS BEEN INSTALLED ON THE PROPER BEDDING, THE BACKFILL MATERIAL, WHICH IS FREE FLOWING AND CLEAR OF ROCKS, IN EXCESS OF 4" DIAMETER AND OTHER LUMPS WHICH WOULD PROHIBIT PROPER COMPACTION, SHALL BE COMMENCED IN LIFTS OF NO MORE THAN 18". THE MATERIAL USED FOR BACKFILL SHOULD BE A TYPE SUITABLE TO OBTAIN THE DENSITY REQUIREMENTS FOR THE SPECIFIC JOB.

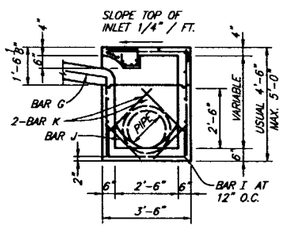

SECTION B–B

THESE DOCUMENTS ARE FOR BIDDING, CONSTRUCTION, AND PERMIT PURPOSES

DATE: 2/21/00

STATE OF TEXAS — JOHN W. BIRKHOFF — 84137 — REGISTERED PROFESSIONAL ENGINEER

NO.	REVISION	BY	DATE

CITY OF LANCASTER, TEXAS

STANDARD CONSTRUCTION DETAILS

STORM SEWER / INLET

DATE: DECEMBER , 1999

SHEET STM SEW-01

STMSEW-01.DWG 01/27/00 EWH BLOCKS: REC-INT1, PLAN-10, SECT_C C, SECT_E-E, SECT_B-B, SECT_A-A1, PLAN_STDINL, MH-CON4, STDINLET1, BARDIAG

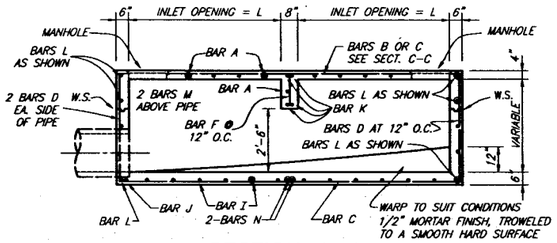

SECTION A-A

12, 14, 16 AND 20 FOOT INLETS

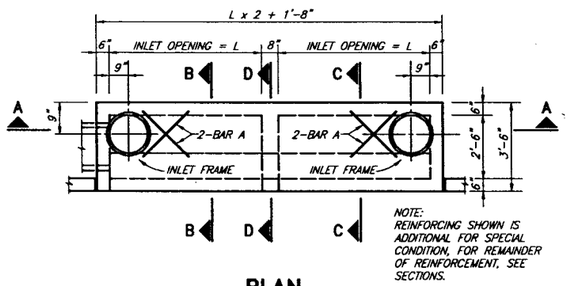

PLAN

20 FOOT INLETS

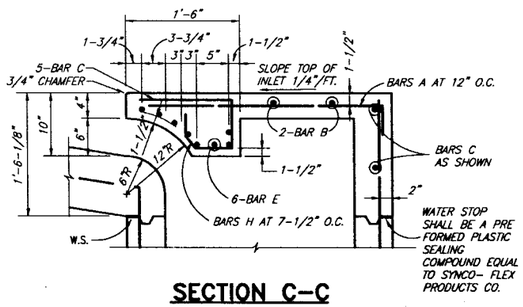

SECTION C-C

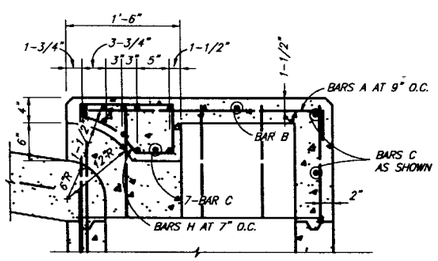

NOTE: FOR ADDITIONAL INFORMATION SEE SECTION C-C

SECTION D-D

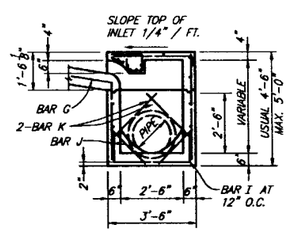

SECTION B-B

DOUBLE INLETS

DIMENSIONS SHOWN ARE FOR MAXIMUM SIZE INLETS

INLET LENGTH	BAR TYPE	BAR DIA. (1/8 IN.)	NO. REQ'D	BAR DIMENSIONS		
				A	B	C
6 FT.	A	3	15	3'-2"	0'-6"	–
	B	3	2	11'-6"	–	–
	C	4	16	13-4"	0'-6"	–
	D	4	9	4'-8"	–	–
	E	5	6	13-4"	–	–
	F	4	5	1'-2"	–	–
	G	3	12	2'-0"	1'-3"	–
	H	3	26	*	*	*
	I	4	12	4'-8"	3'-2"	3'-2"
	J	5	1	*	*	*
	K	5	6	3'-2"	0'-6"	–
	L	4	11	3'-2"	0'-6"	–
	M	4	2	3'-0" **	–	–
	N	4	2	4'-8"	3'-2"	4'-8"
7 FT.	A	3	17	3'-2"	0'-6"	–
	B	3	2	13'-6"	–	–
	C	4	16	15'-4"	0'-3'	–
	D	4	9	4'-8"	–	–
	E	5	6	15'-4"	–	–
	F	4	5	1'-2"	–	–
	G	3	15	2'-0"	1'-3"	–
	H	3	32	*	*	*
	I	4	14	4'-8"	3'-2"	3'-2"
	J	5	1	*	*	*
	K	5	6	3'-2"	0'-6"	–
	L	4	11	3'-2"	0'-6"	–
	M	4	2	3'-0" **	–	–
	N	4	2	4'-8"	3'-2"	4'-8"
8 FT.	A	3	19	3'-2"	0'-6"	–
	B	3	2	15'-6"	–	–
	C	4	16	17'-4"	0'-6"	–
	D	4	9	4'-8"	–	–
	E	5	6	17'-4"	–	–
	F	4	5	1'-2"	–	–
	G	3	12	2'-0"	1'-3"	–
	H	3	26	*	*	*
	I	4	16	4'-8"	3'-2"	3'-2"
	J	5	1	*	*	*
	K	5	6	3'-2"	0'-6"	–
	L	4	11	3'-2"	0'-6"	–
	M	4	2	3'-0" **	–	–
	N	4	2	4'-8"	3'-2"	4'-8"
10 FT.	A	3	23	3'-2"	0'-6"	–
	B	3	2	19'-6"	–	–
	C	4	16	21'-4"	0'-6"	–
	D	4	9	4'-8"	–	–
	E	5	6	21'-4"	–	–
	F	4	5	1'-2"	–	–
	G	3	15	2'-0"	1'-3"	–
	H	3	32	*	*	*
	I	4	20	4'-8"	3'-2"	3'-2"
	J	5	1	*	*	*
	K	5	6	3'-2"	0'-6"	–
	L	4	11	3'-2"	0'-6"	–
	M	4	2	3'-0" **	–	–
	N	4	2	4'-8"	3'-2"	4'-8"

* SEE DIAGRAM FOR DIMENSIONS.
** FIELD CUT AS REQUIRED TO ACCOMMODATE DRAIN PIPE 16' AND 20' INLETS

REINFORCING STEEL SCHEDULE

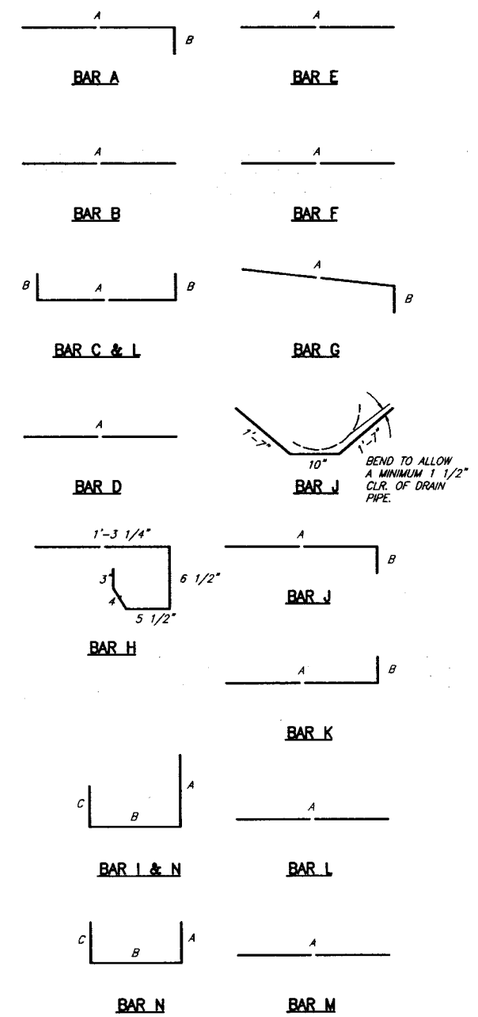

△ BEND TO ALLOW A MINIMUM 1 1/2" CIR. OF DRAIN PIPE
* SEE DIAGRAMS FOR DIMENSIONS
** FIELD CUT AS REQUIRED TO ACCOMODATE DRAIN PIPE

BAR BENDING DIAGRAMS

NO.	REVISION	BY	DATE

CITY OF LANCASTER, TEXAS

STANDARD CONSTRUCTION DETAILS

STORM SEWER / INLET

DATE: DECEMBER , 1999

SHEET STM SEW-02

THESE DOCUMENTS ARE FOR BIDDING, CONSTRUCTION, AND PERMIT PURPOSES

DATE: 2/2/00

STATE OF TEXAS — JOHN W. BIRKHOFF — 54137 — REGISTERED PROFESSIONAL ENGINEER

BLOCKS: SECT_A-A, PLAN_20, SECT_C-C, SECT_D-D, SECT_B-B, BARLIST2

01/27/00 EWH

STMSEW-02.DWG

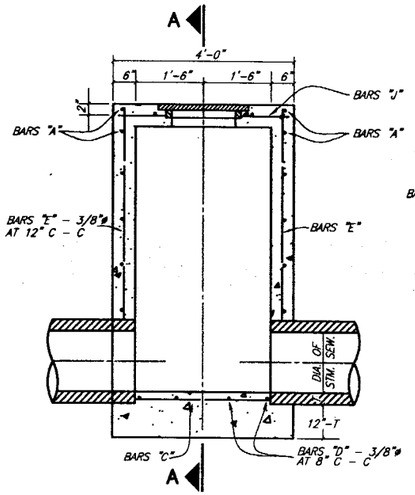

ELEVATION

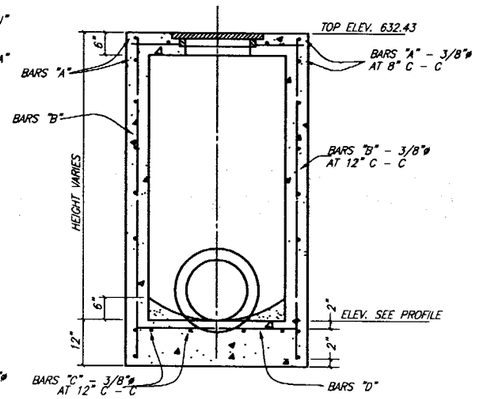

SECTION A–A

STORM SEWER TYPE A MANHOLE

MAX. PIPE SIZE 30"

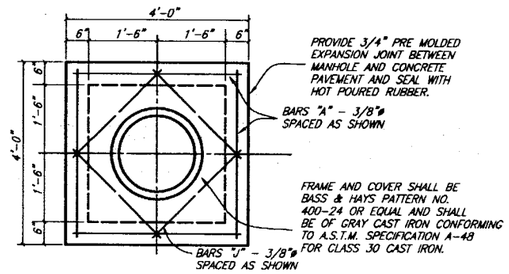

TOP PLAN
TYPE A & TYPE B
STORM SEWER MANHOLE

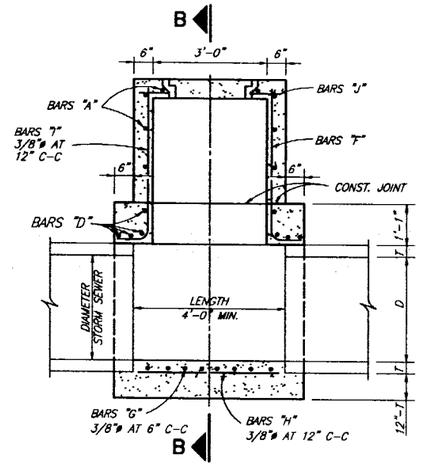

ELEVATION

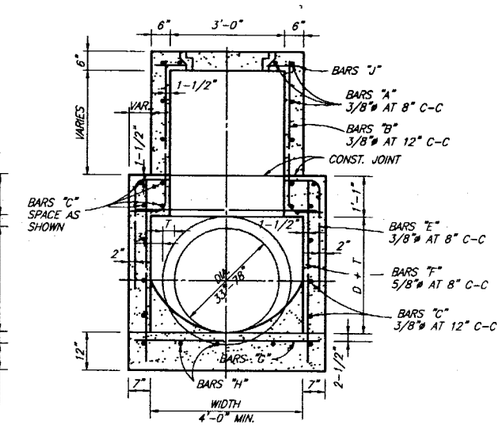

SECTION B–B

TYPE B STORM SEWER MANHOLE

MAX. PIPE SIZE 78"

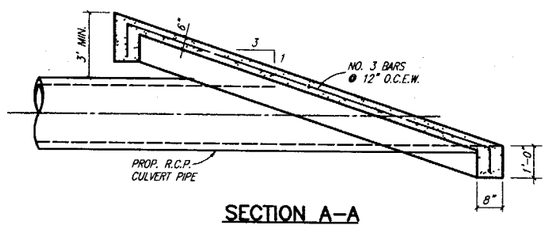

SECTION A–A

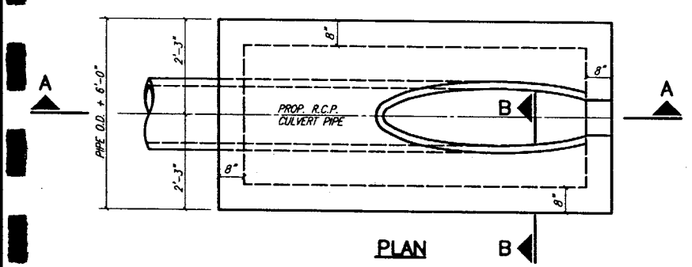

PLAN B

SLOPED CONCRETE HEADWALL

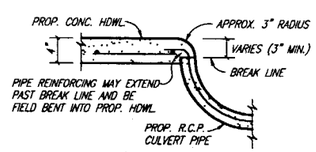

SECTION B–B

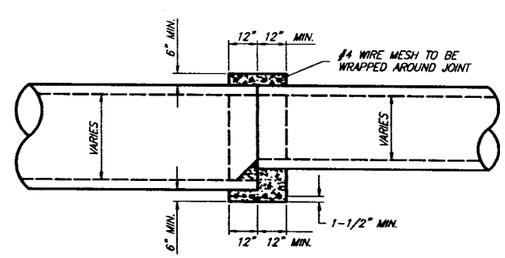

DETAIL OF CONCRETE COLLAR FOR R.C.P. OR R.C.A.P. CONNECTIONS

INSIDE JOINT SHALL BE CONCRETE MORTAR

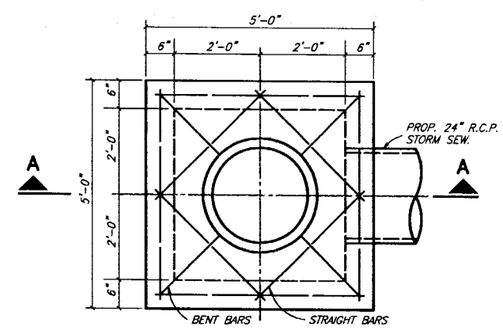

PLAN

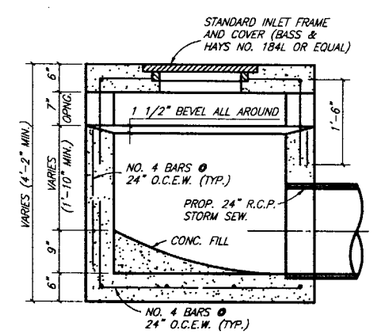

SECTION A–A

STANDARD DROP INLET

THESE DOCUMENTS ARE FOR BIDDING, CONSTRUCTION, AND PERMIT PURPOSES.

DATE: 2/2/00

STATE OF TEXAS — JOHN W. BURKHOFF — 54137 — REGISTERED PROFESSIONAL ENGINEER

NO.	REVISION	BY	DATE

CITY OF LANCASTER, TEXAS

STANDARD CONSTRUCTION DETAILS

STORM SEWER / INLET / DETAILS

DATE: DECEMBER , 1999

SHEET STM SEW-03

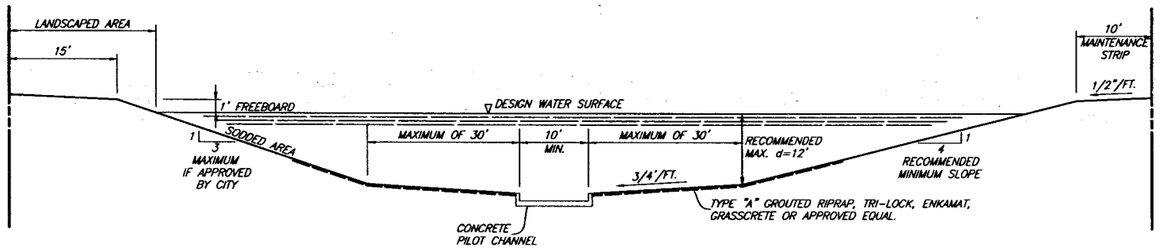

TYPICAL CHANNEL WITH REINFORCED CONCRETE LINED PILOT CHANNEL

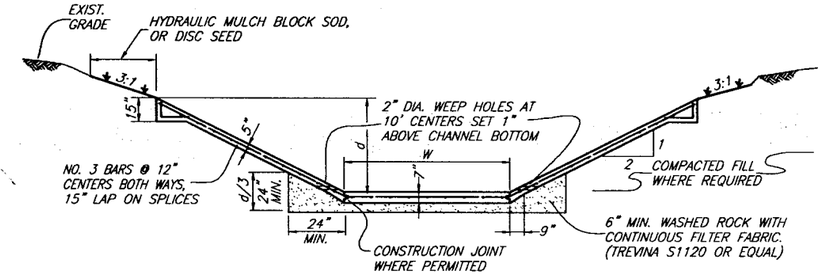

TYPICAL REINFORCED CONCRETE CHANNEL

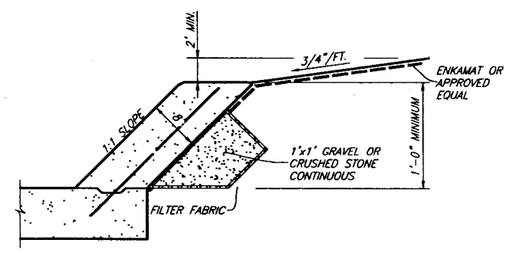

OPTIONAL (SLOPED WALL)

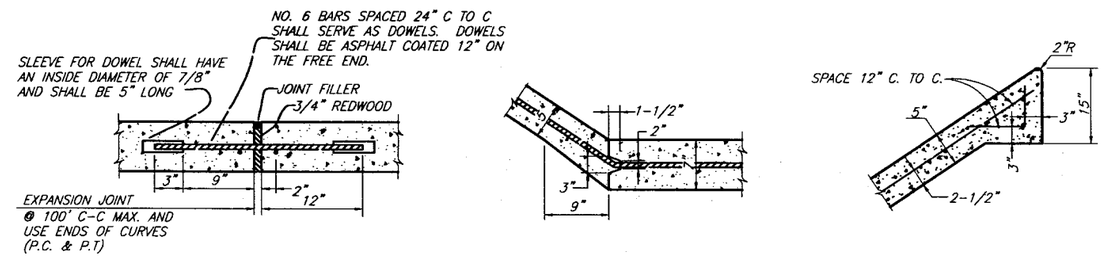

TRANSVERSE EXPANSION JOINT

CONSTRUCTION JOINT
OPTIONAL

SLAB EDGE – DETAIL "A"

CONCRETE CHANNEL

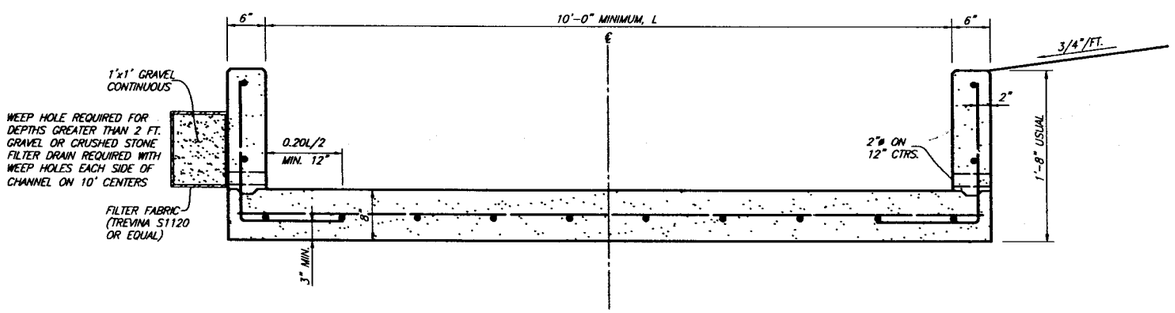

REINFORCED CONCRETE PILOT CHANNEL (VERTICAL WALL)

GENERAL NOTES FOR LINED CHANNELS

1. CONSTRUCTION JOINT SHOWN FOR CONVENIENCE ONLY, MONOLITHIC CONSTRUCTION MAY BE USED.
2. ALL VISIBLE SURFACES SHALL BE A TROWEL FINISH.
3. ALL REINFORCING STEEL SHALL BE 3/8" DIA. AND SPACED 12" CENTER TO CENTER BOTH WAYS UNLESS OTHERWISE SPECIFIED.
4. IF WOOD FORMS ARE USED WITH CONSTRUCTION JOINT, THEY SHALL BE TWO, 2"x4". AND SHALL NOT BE REMOVED UNTIL CONCRETE ON SLOPES IS READY TO BE PLACED.
5. ALL CONCRETE IN LINED CHANNEL SHALL BE NCTCOG CLASS "A" (MIN. 3000 P.S.I.) CONCRETE.
6. FLAT BOTTOM TO BE CONSTRUCTED WHEN CHANNEL WIDTH IS LESS THAN 12 FOOT.
7. 3/4" CHAMFER ON ALL CONCRETE CORNERS.

THESE DOCUMENTS ARE FOR BIDDING, CONSTRUCTION, AND PERMIT PURPOSES.

DATE: 2/2/00

STATE OF TEXAS
JOHN W. BIRKHOFF
84137
REGISTERED PROFESSIONAL ENGINEER

NO.	REVISION	BY	DATE

CITY OF LANCASTER, TEXAS

STANDARD CONSTRUCTION DETAILS

CHANNELS / CONCRETE

DATE: DECEMBER , 1999

SHEET STM SEW-04

STMSEW-04.DWG 01/27/00 EWH BLOCKS: CHANNEL_SECT, CHANNEL_CONC, CHANNEL_PILOT, CHANNEL_DTLS, GEN_CHANNELNOTE

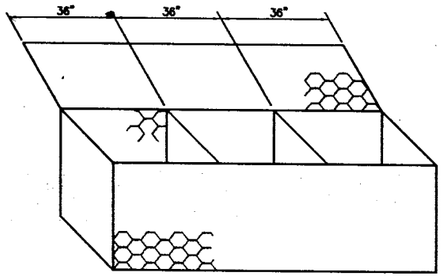

GABION CONTAINER

N.T.S.

NOTE:
GABION MAY BE CUT BUT SHALL BE RETIED IN A MANNER TO PRODUCE A CLOSED CELL AND ALL TIES SHALL BE IN CONFORMANCE WITH DETAILS

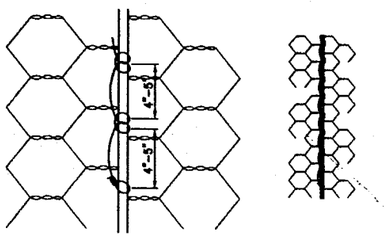

GABION TIE

N.T.S.

NOTE:
ALL TYING OF GABIONS SHALL BE AS SHOWN

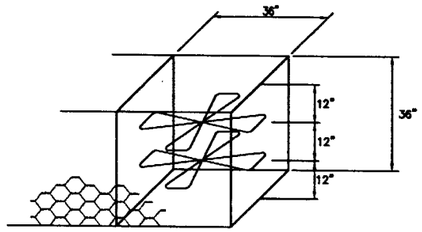

INNER TIE WIRE

N.T.S.

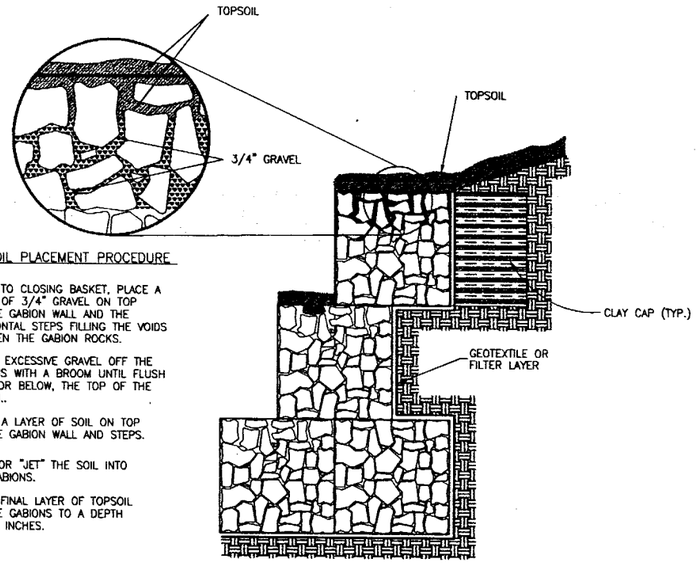

TOPSOIL PLACEMENT PROCEDURE

1. PRIOR TO CLOSING BASKET, PLACE A LAYER OF 3/4" GRAVEL ON TOP OF THE GABION WALL AND THE HORIZONTAL STEPS FILLING THE VOIDS BETWEEN THE GABION ROCKS.
2. SWEEP EXCESSIVE GRAVEL OFF THE GABIONS WITH A BROOM UNTIL FLUSH WITH, OR BELOW, THE TOP OF THE GABION..
3. PLACE A LAYER OF SOIL ON TOP OF THE GABION WALL AND STEPS.
4. WASH OR "JET" THE SOIL INTO THE GABIONS.
5. PLACE FINAL LAYER OF TOPSOIL ON THE GABIONS TO A DEPTH OF SIX INCHES.

SECTION

NOTE:
DO NOT USE SHARP TOOLS WHEN SPREADING TOPSOIL ON GABIONS

VEGETATED GABION WALL TOPSOIL PLACEMENT

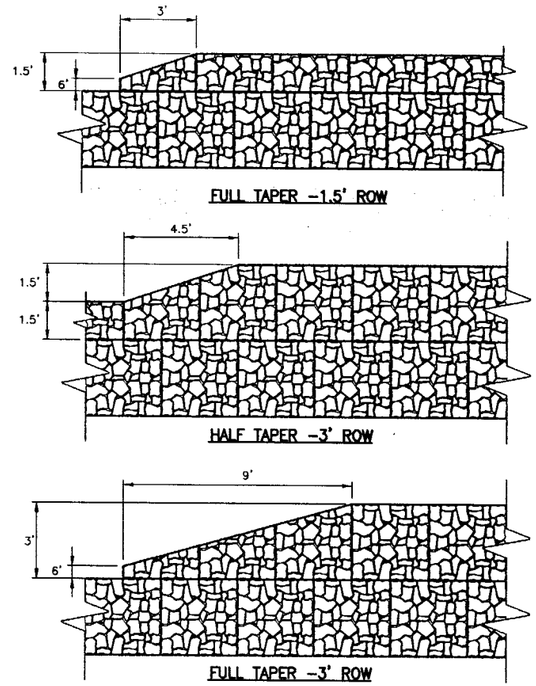

TAPERED WALL HEIGHT TRANSITION

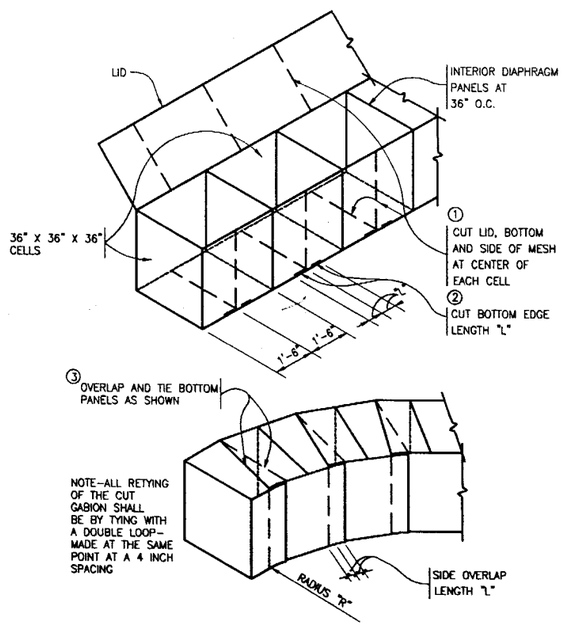

GABION RADIUS PROCEDURE

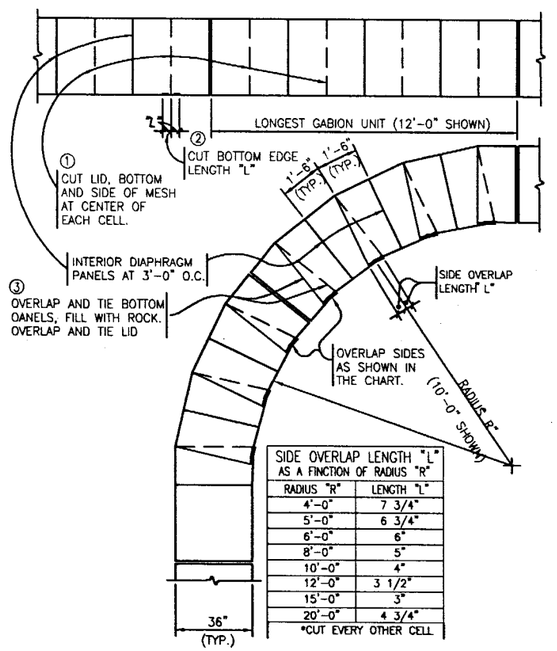

SIDE OVERLAP LENGTH "L" AS A FINCTION OF RADIUS "R"	
RADIUS "R"	LENGTH "L"
4'-0"	7 3/4"
5'-0"	6 3/4"
6'-0"	6"
8'-0"	5"
10'-0"	4"
12'-0"	3 1/2"
15'-0"	3"
20'-0"	4 3/4"
*CUT EVERY OTHER CELL	

GABION RADIUS PROCEDURE

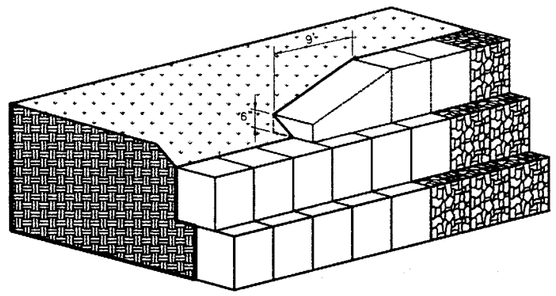

STANDARD TAPER FOR WALL HEIGHTS TRANSITIONS

THESE DOCUMENTS ARE FOR BIDDING, CONSTRUCTION, AND PERMIT PURPOSES

DATE: 2/2/00

STATE OF TEXAS
JOHN W. BIRCHOFF
54137
REGISTERED
PROFESSIONAL ENGINEER

NO.	REVISION	BY	DATE

CITY OF LANCASTER, TEXAS

STANDARD CONSTRUCTION DETAILS

CHANNELS / GABIONS

DATE: DECEMBER , 1999

SHEET
STM SEW-05

STMSEW-05.DWG 01/27/00 EWH BLOCKS: Gabion, Radius1, Radius2, Veg-wall, Wall-t1, Taper-1

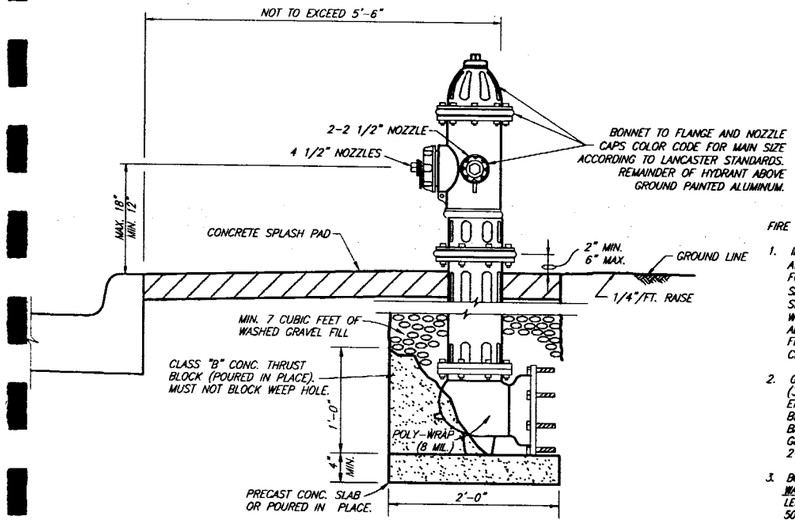

FIRE HYDRANT NOTES:

1. IN GENERAL ALL FIRE HYDRANTS SHALL CONFORM TO AWWA STANDARDS SPECIFICATIONS FOR FIRE HYDRANTS FOR ORDINARY WATER WORKS SERVICE FOR WATER AND SANITARY SEWER IMPROVEMENTS. FIRE HYDRANTS SHALL HAVE A 5-1/4" MINIMUM VALVE OPENING AND WITH A BARREL APPROXIMATELY 7" INSIDE DIAMETER. ALL HYDRANTS SHALL BE EQUIPPED WITH A BREAKAWAY FLANGE. ALL HYDRANTS SHALL BE APPROVED BY THE CITY.

2. GUARD POSTS SHALL BE 6 L.F. OF 6" DIA. STEEL PIPE (3' ABOVE & BELOW GROUND LEVEL). POST SHALL BE ENCASED IN 16" DIA. CONC. PIER TO A DEPTH OF 12" BELOW POST BOTTOM. REINF. CONC. PIER WITH 2 NO. 6 BARS (12" LONG) THRU POST INTO PIER. POST ABOVE GROUND LEVEL SHALL BE PAINTED ALUMINUM WITH 2-2 INCH BANDS OF RED AND WHITE REFLECTIVE TAPE.

3. BONNET COLOR

WATER MAIN CAP	COLOR
LESS THAN 500 G.P.M.	RED
500-999 G.P.M.	ORANGE
1,000-1,499 G.P.M.	GREEN
1,500 & GREATER G.P.M.	BLUE

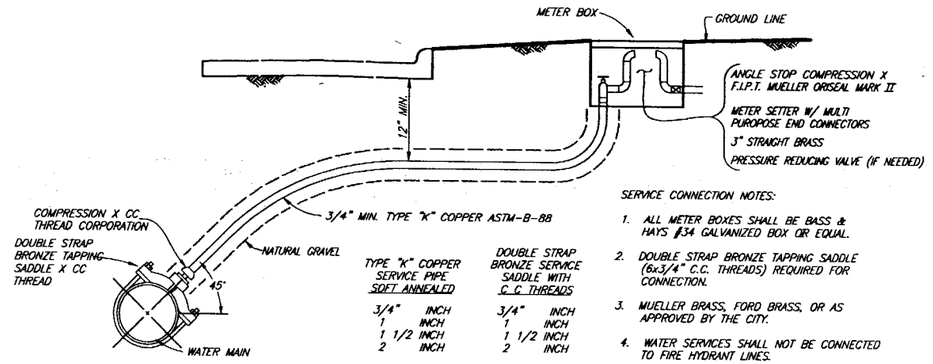

TYPE "K" COPPER SERVICE PIPE SOFT ANNEALED	DOUBLE STRAP BRONZE SERVICE SADDLE WITH C.C. THREADS
3/4" INCH	3/4" INCH
1 INCH	1 INCH
1 1/2 INCH	1 1/2 INCH
2 INCH	2 INCH

SERVICE CONNECTION NOTES:

1. ALL METER BOXES SHALL BE BASS & HAYS #34 GALVANIZED BOX OR EQUAL.

2. DOUBLE STRAP BRONZE TAPPING SADDLE (6x3/4" C.C. THREADS) REQUIRED FOR CONNECTION.

3. MUELLER BRASS, FORD BRASS, OR AS APPROVED BY THE CITY.

4. WATER SERVICES SHALL NOT BE CONNECTED TO FIRE HYDRANT LINES.

5. EMBEDMENT FOR SERVICE LINE SHALL BE 6" ALL AROUND OF NATURAL GRAVEL NCTCOG ITEM 2.1.8 (e).

TYPICAL SERVICE CONNECTION WITH METER BOX

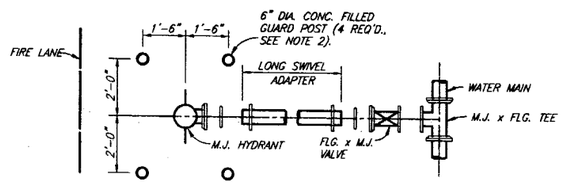

TYPICAL FIRE HYDRANT INSTALLATION

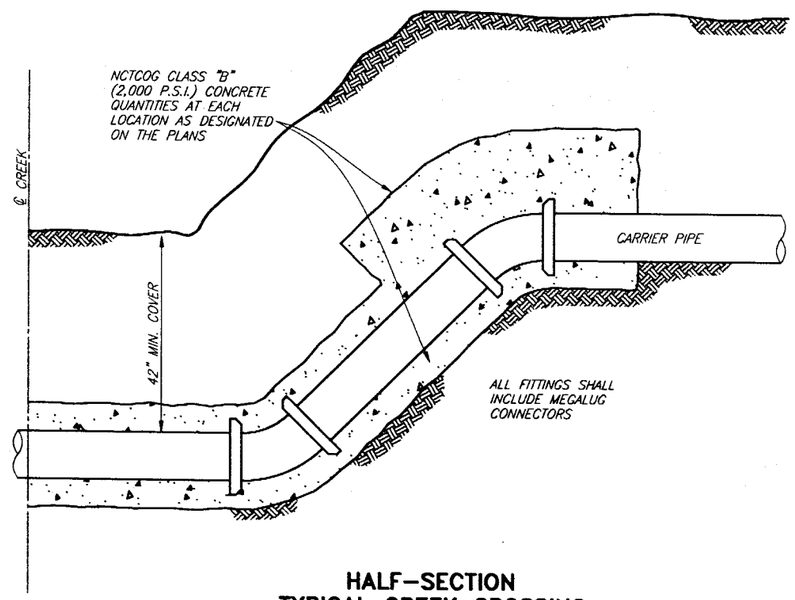

HALF-SECTION
TYPICAL CREEK CROSSING

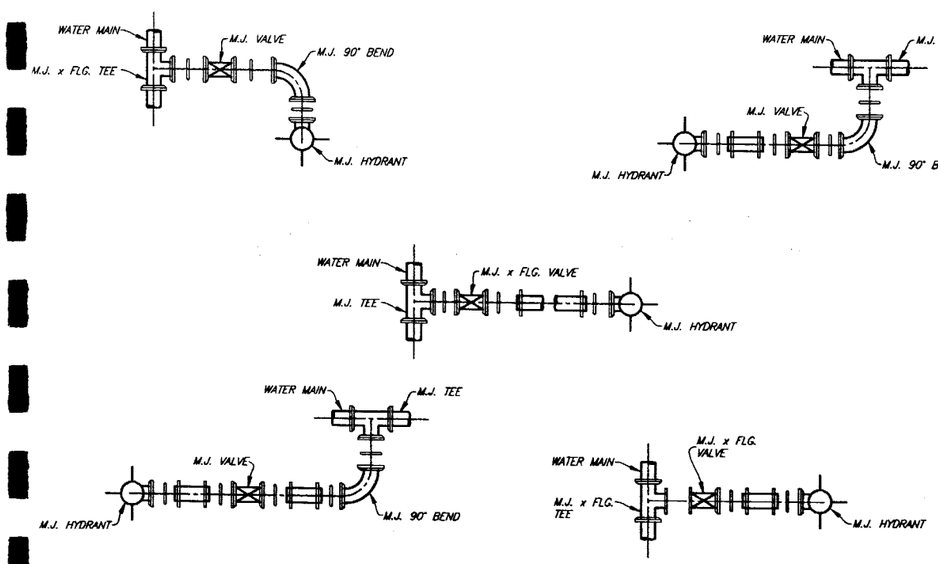

TYPICAL FIRE HYDRANT INSTALLATION PLANS

THESE DOCUMENTS ARE FOR BIDDING, CONSTRUCTION, AND PERMIT PURPOSES.

DATE: 2/2/00

STATE OF TEXAS
JOHN W. BIRKHOFF
54137
REGISTERED
PROFESSIONAL ENGINEER

NO.	REVISION	BY	DATE

CITY OF LANCASTER, TEXAS

STANDARD CONSTRUCTION DETAILS

WATER

DATE: DECEMBER , 1999

SHEET WATER-01

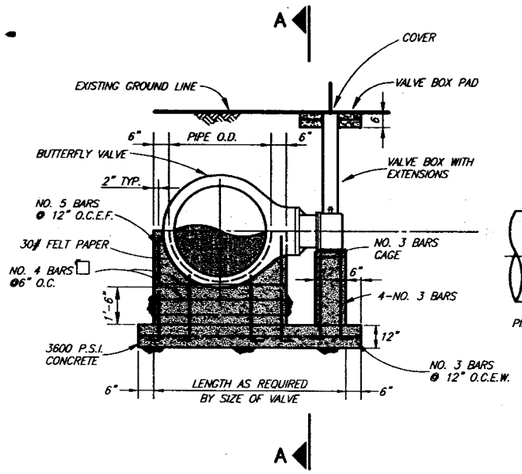

SECTION B-B

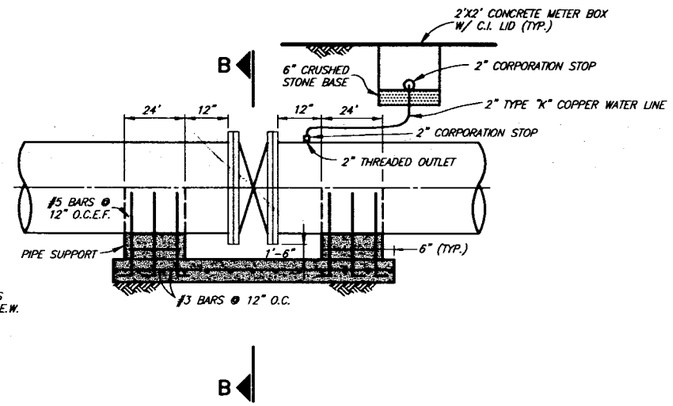

SECTION A-A

BUTTERFLY VALVE INSTALLATION

NOTE:
ACTUATOR SHALL BE FOR DIRECT BURY SERVICE

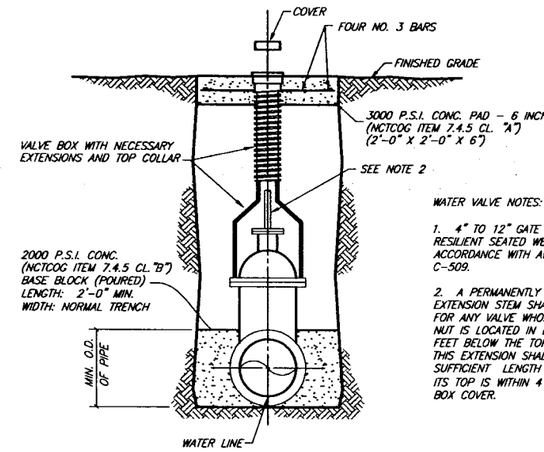

VALVE SETTING & BOX

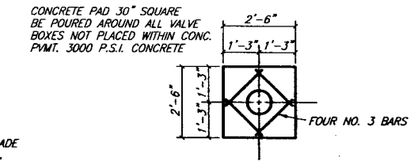

VALVE BOX PAD PLAN

WATER VALVE NOTES:

1. 4" TO 12" GATE VALVE SHALL BE RESILIENT SEATED WEDGE GATE VALVES ACCORDANCE WITH AWWA STANDARD C-509.

2. A PERMANENTLY ATTACHED VALVE EXTENSION STEM SHALL BE REQUIRED FOR ANY VALVE WHOSE OPERATING NUT IS LOCATED IN EXCESS OF 4 FEET BELOW THE TOP OF VALVE BOX. THIS EXTENSION SHALL BE OF SUFFICIENT LENGTH TO INSURE THAT ITS TOP IS WITHIN 4" OF THE VALVE BOX COVER.

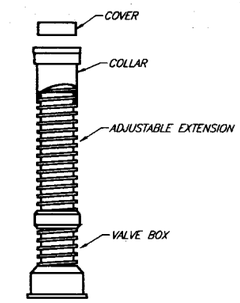

VALVE BOX WITH EXTENSION

GATE VALVE INSTALLATION

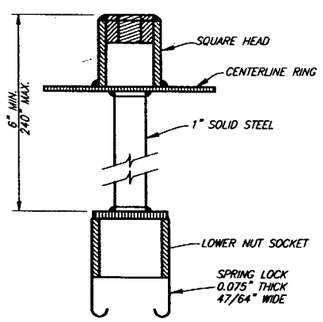

SPRING LOCK VALVE EXTENSION

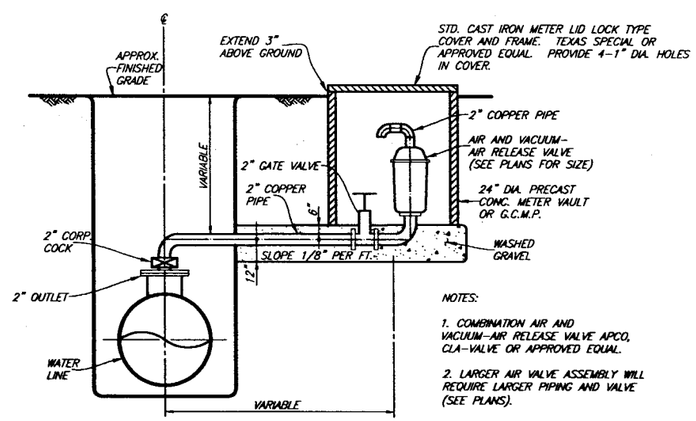

NOTES:

1. COMBINATION AIR AND VACUUM-AIR RELEASE VALVE APCO, CLA-VALVE OR APPROVED EQUAL.

2. LARGER AIR VALVE ASSEMBLY WILL REQUIRE LARGER PIPING AND VALVE (SEE PLANS).

AIR AND VACUUM - AIR RELEASE VALVE INSTALLATION

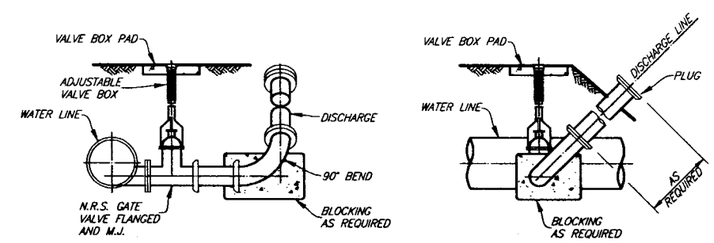

BLOW OFF VALVE

THESE DOCUMENTS ARE FOR BIDDING, CONSTRUCTION, AND PERMIT PURPOSES.

DATE: 2/2/00

STATE OF TEXAS
JOHN W. BIRKHOFF
54137
REGISTERED
PROFESSIONAL ENGINEER

NO.	REVISION	BY	DATE

CITY OF LANCASTER, TEXAS

STANDARD CONSTRUCTION DETAILS

WATER

DATE: DECEMBER , 1999

SHEET WATER-02

LEGEND

1. GATE VALVE – M.J. & M.J.
2. D.I. TEE – M.J., M.J., M.J.
4. D.I. 90° BEND – M.J. & M.J.
5. D.I. PIPE – P.E. & P.E.
6. O.S. & Y. VALVE – FLG. & FLG.
8. FLANGED COUPLING ADAPTER
9. D.I. PIPE – FLG. & P.E. NIPPLE
10. VALVE COUVERS & LIDS
11. ANCHORING RODS
12. WALL SLEEVE – FLG. & M.J.

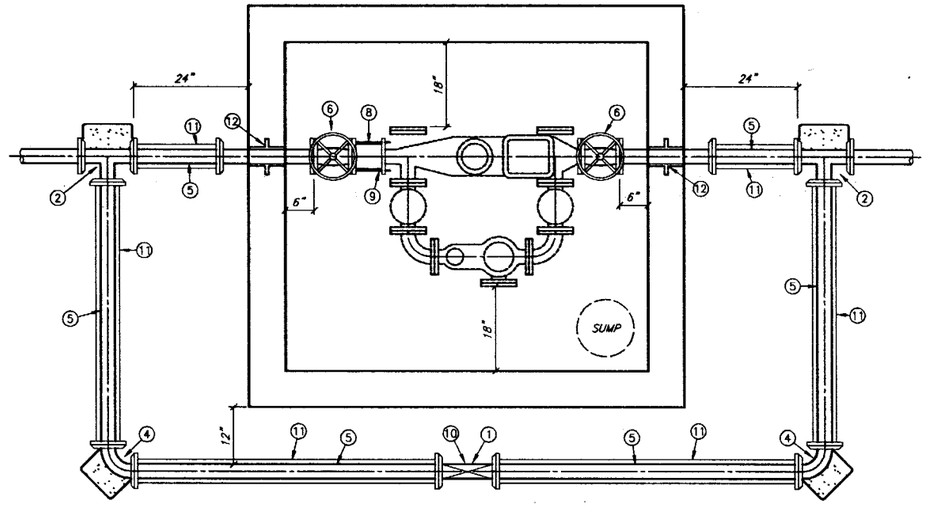

PLAN

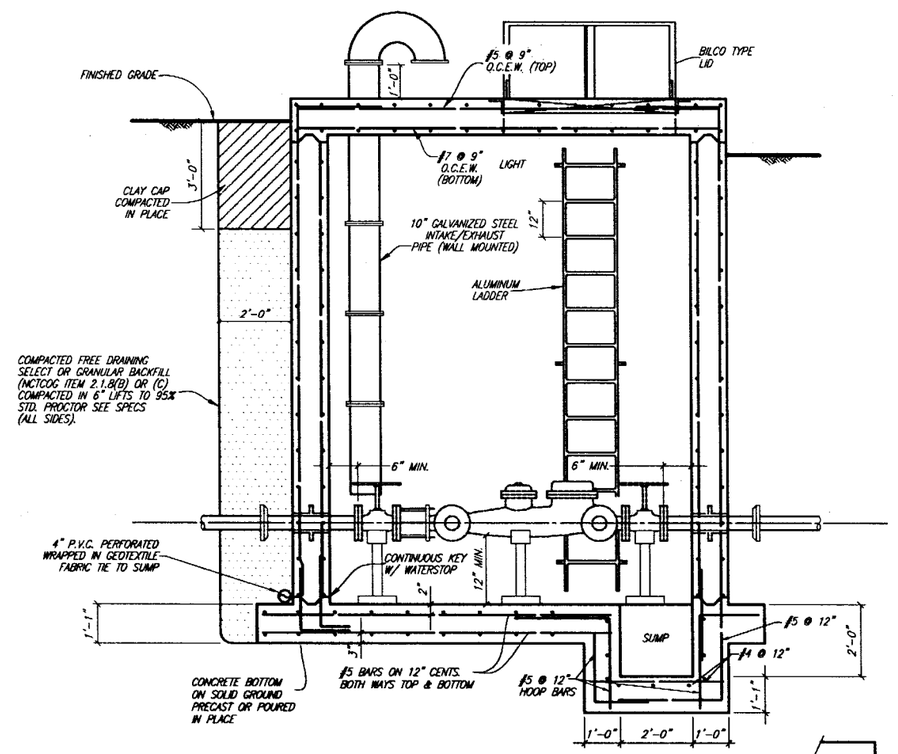

ELEVATION
METER VAULT

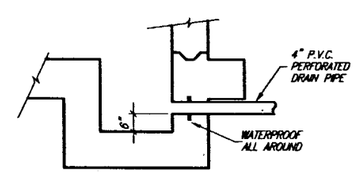

SUMP DRAIN CONNECTION

NO SCALE

METER VAULT & BY-PASS SPECIFICATIONS

1. NOTIFY THE UTILITY OPERATIONS DEPARTMENT PRIOR TO CONSTRUCTION OF METER VAULT OR BY-PASS ASSEMBLY.
2. THE METER VAULT CAN BE EITHER POURED IN PLACE OR PRE-CAST. ALL WALLS, EITHER POURED IN PLACE OR PRE-CAST, SHALL BE MONOLITHIC POUR. NO SEAMS OR EXTENSIONS WILL BE ALLOWED. CONCRETE SHALL BE 6" THICK-3,000 P.S.I., REINFORCED WITH #5 STEEL BARS ON 12" CENTERS EACH WAY, ON POURED IN PLACE VAULTS. PRE-CAST VAULTS SHALL BE 4" THICK-4,500 P.S.I. CONCRETE, REINFORCED WITH #5 STEEL BARS ON 8" CENTERS BOTH WAYS. THESE ARE MINIMUM SPECIFICATIONS.
3. THE BOTTOM OF THE VAULT SHALL BE 6" THICK-3,000 P.S.I. CONCRETE, REINFORCED WITH #5 STEEL BARS ON 12" CENTERS BOTH WAYS. A 4" DEEP x 12" DIAMETER SUMP SHALL BE INSTALLED TO ONE SIDE AND IN EITHER CORNER OF THE BOTTOM OF THE SLAB. A 4" CUSHION OF SAND SHALL BE INSTALLED UNDER THE SLAB. IF A PRE-FABRICATED VAULT IS TO BE USED, A LAYER OF RAM-NEX SHALL BE INSTALLED BETWEEN THE WALLS AND BOTTOM SLAB.
4. THE VAULT SHALL NOT BE INSTALLED IN ANY DRIVE OF PARKING AREA AND MUST BE LOCATED IN A UTILITY EASEMENT DEDICATED TO THE CITY OF LANCASTER. ALL PIPING INSIDE THE VAULT AND THE VAULT ITSELF MUST BE INSPECTED AND APPROVED BY THE UTILITY OPERATIONS DEPARTMENT.
5. THE VAULT LID SHALL BE BILCO TYPE Q-4AL LEAF DESIGN LID. ANGLE FRAME IS 1/4" STEEL WITH STRAP ANCHORS BOLTED TO THE EXTERIOR. THE LEAF IS 1/4" STEEL DIAMOND PATTERN PLATE, PIVOTING ON TORSION BARS FOR EASY OPERATIONS. THE MINIMUM LIVE LOAD CAPACITY IS 150 LBS. PER SQUARE FOOT. THE LID SIZE SHALL BE 3'x3'. THE LID SHALL BE PAINTED WITH 43-38 TNEMEC DIFFUSED ALUMINUM PAINT OR APPROVED EQUAL.
6. ALL PIPING INSIDE THE VAULT SHALL BE DUCTILE IRON PIPE (AWWA C151) WITH FLANGED FITTINGS. THE OUTSIDE DIMENSION OF THE PIPING SHALL BE WITHIN THE FOLLOWING RANGES: 3" PIPE – 3.74" TO 3.86"; 4" PIPE – 4.74" TO 4.90"; 6" PIPE – 6.81" TO 6.96"; 8" PIPE – 8.98" TO 9.20"; 10" PIPE – 11.04" TO 11.61". VARIATION FROM THESE DIMENSIONS WILL RESULT IN THE VAULT BEING REJECTED.
7. THE STRAINER, METER AND FLANGED ADAPTER COUPLING INSTALLED BY THE CONTRACTOR AND APPROVED BY CITY.
8. THE STRAINER, METER AND FLANGED ADAPTER COUPLING WILL NOT BE INSTALLED UNTIL THE METER VAULT AND TAPS ARE ACCEPTED BY THE CITY OF LANCASTER UTILITY OPERATIONS DEPARTMENT. ALL UTILITIES MUST ALSO HAVE BEEN ACCEPTED AND RELEASED BY THE CITY OF LANCASTER ENGINEERING OFFICE PRIOR TO METER INSTALLATION.
9. THE MAIN LINE GATE VALVES SHALL BE RESILIENT WEDGE DESIGN, NON-RISING STEM VALVES, WHICH HAVE RECEIVED FORMAL APPROVAL FROM THE CITY OF LANCASTER. ALL VALVES SHALL BE FLANGED BOTH ENDS AND HAVE HAND WHEELS.
10. CONTRACTOR SHALL HAVE A CHOICE OF EITHER HAVING A LINK SEAL WALL SLEEVE MODEL WS-6-28-S-6 FOR 3" PIPE; MODEL WS-8-32-S-8 FOR 4" PIPE; MODEL WS-10-36-S-6 FOR 6" PIPE; MODEL WS-12-37-S-6 FOR 8" PIPE; MODEL WS-14-37-S-6 FOR 10" PIPE, CAST IN THE WALL VAULT. THE ABOVE MENTIONED WALL SLEEVES SHALL USE THE FOLLOWING LINK SEALS: FOR 3" PIPE – 5#LS325-C; FOR 4" PIPE – 5 – #LS400-C; FOR 6" PIPE 7 –#LS400-C; FOR 8" PIPE – 9 #LS-400C; FOR 10" PIPE – 12 – #LS325-C. THE CONTRACTOR MAY HAVE THE VAULT WALL CORED BEFORE INSTALLATION OF VAULT AND PIPING. IF THE WALL IS CORED THE FOLLOWING SPECIFICATIONS SHALL BE USED: FOR 3" PIPE CORE SIZE SHALL BE 6" AND USE 5 – #LS325-C LINK SEALS; FOR 4" PIPE CORE SIZE SHALL BE 8" AND USE 5 – #LS400-C LINK SEALS; FOR 6" PIPE CORE SIZE SHALL BE 10" AND USE 7 – #LS400-C LINK SEALS; FOR 8" PIPE CORE SIZE SHALL BE 12" AND USE 9 – #LS400-C LINK SEALS; FOR 10" PIPE CORE SIZE SHALL BE 14" AND USE 11 – LS425-C LINK SEALS. BREAKING OF THE WALL WITH A JACKHAMMER OR USING PRE-CAST KNOCKOUT PANELS IN NOT PERMITTED.
11. THERE WILL BE A SOLID REINFORCED CONCRETE SUPPORT BLOCK UNDER EACH GATE VALVE.
12. MINIMUM DEPTH OF ANY VAULT SHALL BE 4'-6".
13. IF ELEVATION ADJUSTMENTS ARE NEEDED ON THE ACCESS LID, CONTRACTOR SHALL CONTRACT UTILITY OPERATIONS DEPARTMENT FOR APPROVAL PRIOR TO IMPLEMENTATION OF ADJUSTMENTS.

THESE DOCUMENTS ARE FOR BIDDING, CONSTRUCTION, AND PERMIT PURPOSES.

DATE: 2/2/00

STATE OF TEXAS
JOHN W. BRISHOFF
54137
REGISTERED
PROFESSIONAL ENGINEER

NO.	REVISION	BY	DATE

CITY OF LANCASTER, TEXAS

STANDARD CONSTRUCTION DETAILS

WATER

DATE: DECEMBER , 1999

SHEET WATER-03

WATER-03.DWG 01/27/00 EWH BLOCKS: METERVAULT

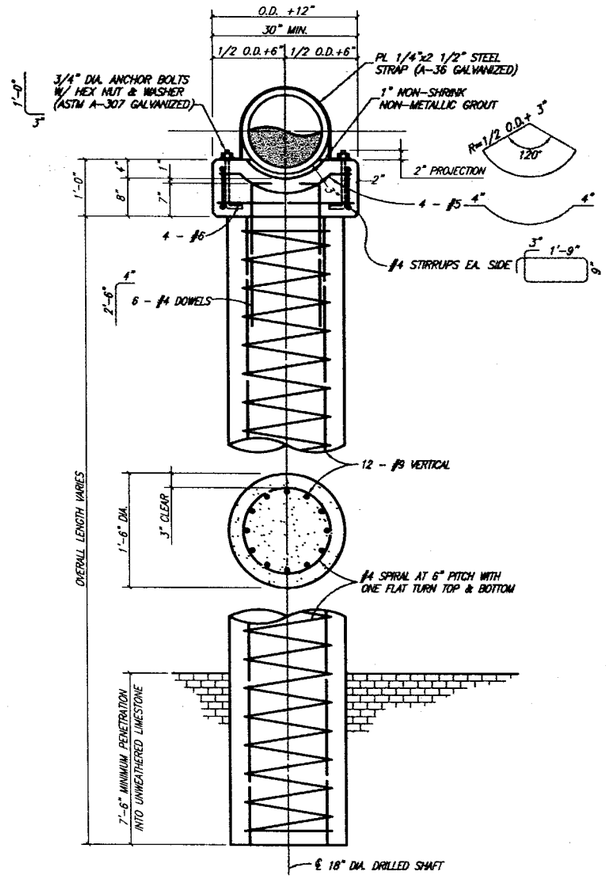

AERIAL CROSSING PIER & PIER CAP

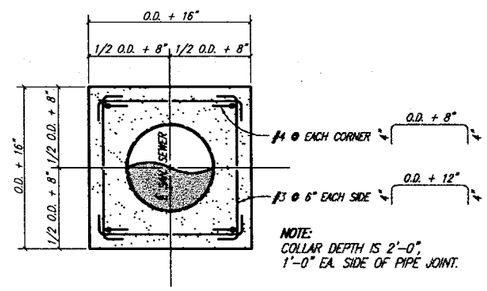

AERIAL CROSSING CONCRETE COLLAR

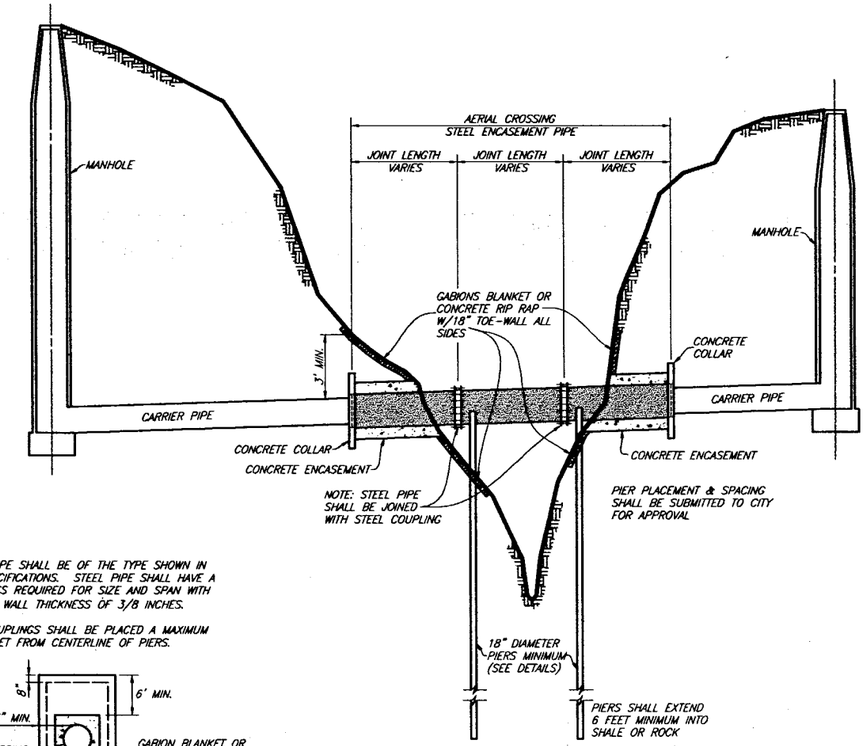

AERIAL CROSSING

STEEL PIPE SHALL BE OF THE TYPE SHOWN IN THE SPECIFICATIONS. STEEL PIPE SHALL HAVE A THICKNESS REQUIRED FOR SIZE AND SPAN WITH MINIMUM WALL THICKNESS OF 3/8 INCHES.

PIPE COUPLINGS SHALL BE PLACED A MAXIMUM OF 5 FEET FROM CENTERLINE OF PIERS.

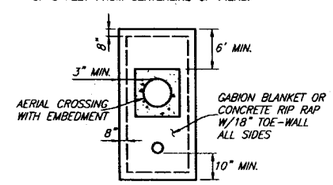

BANK PROTECTION (TYP.)

NOTE:
ENGINEERING DESIGN SHALL BE SUBMITTED TO CITY FOR APPROVAL FOR USE FOR EACH CROSSING. PIERS SHALL BE PLACED AT MAXIMUM SPAN DISTANCE AS DICTATED BY ENGINEER'S DESIGN.

THESE DOCUMENTS ARE FOR BIDDING, CONSTRUCTION, AND PERMIT PURPOSES

DATE: 2/2/00

STATE OF TEXAS — JOHN W. BIRKHOFF — 54137 — REGISTERED PROFESSIONAL ENGINEER

NO.	REVISION	BY	DATE

CITY OF LANCASTER, TEXAS

STANDARD CONSTRUCTION DETAILS

SANITARY SEWER

DATE: DECEMBER , 1999

SHEET SEWER-01

SEWER-01.DWG 01/27/00 EWH BLOCKS: PIER, COLLAR, AERIAL-X

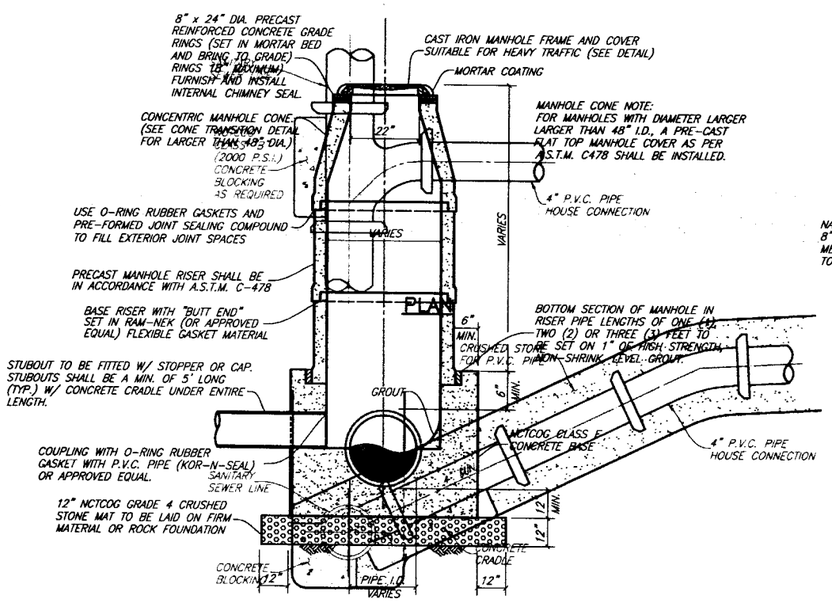

PRECAST CONCRETE MANHOLE SECTION

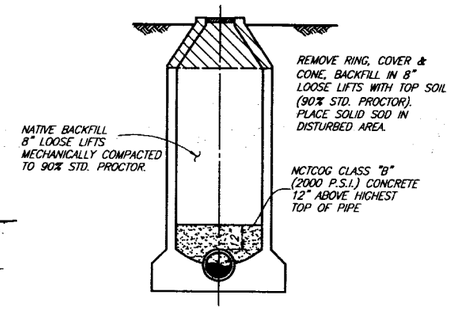

MANHOLE ABANDONMENT

OUTSIDE PAVEMENT AREA

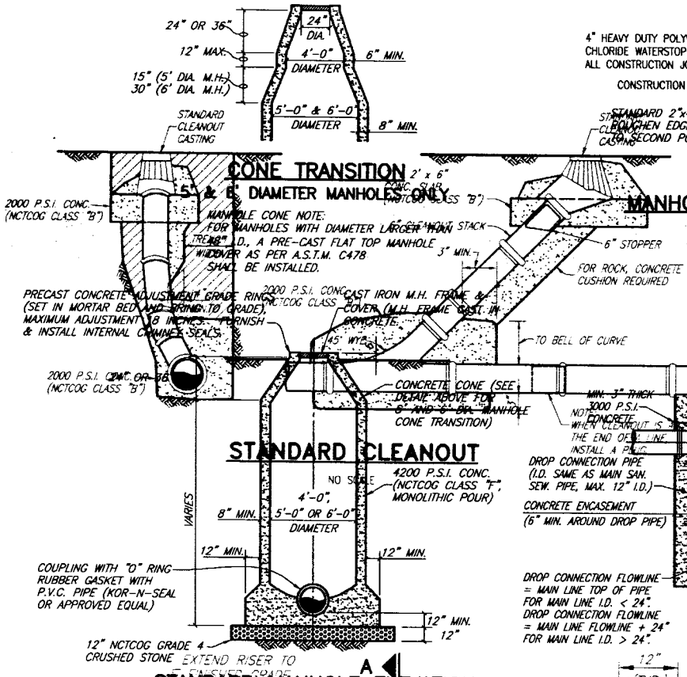

CONE TRANSITION

5' & 6' DIAMETER MANHOLES ONLY

MANHOLE CONSTRUCTION JOINT

KEYWAY WITH WATERSTOP

STANDARD CLEANOUT

NO SCALE

STANDARD MANHOLE ELEVATION

4', 5' & 6' DIAMETER MANHOLES

MANHOLE WITH DROP CONNECTION

5' & 6' DIAMETER MANHOLES (MIN. 5' DIA.)

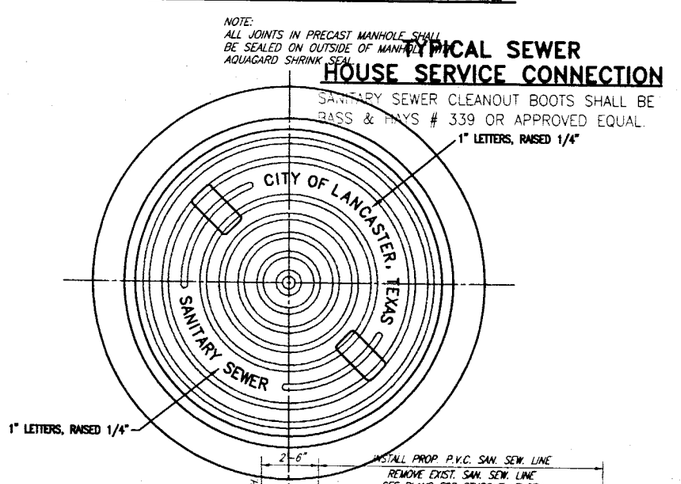

TYPICAL SEWER HOUSE SERVICE CONNECTION

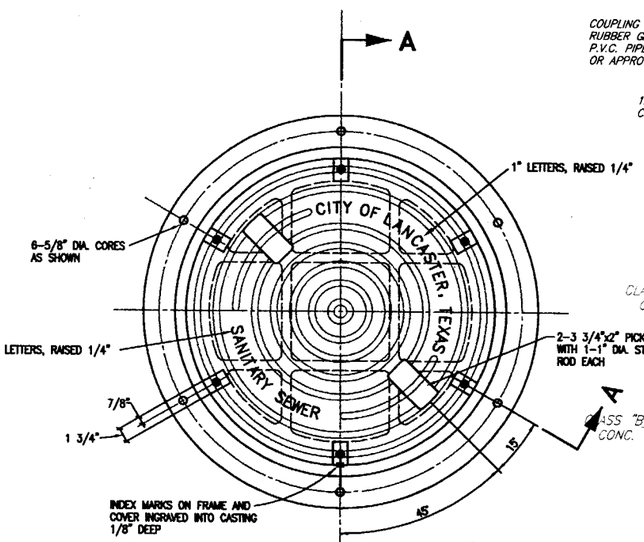

PLAN

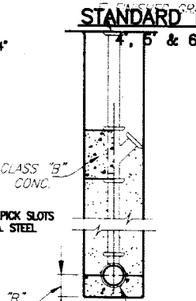

WITH CLEAN OUT

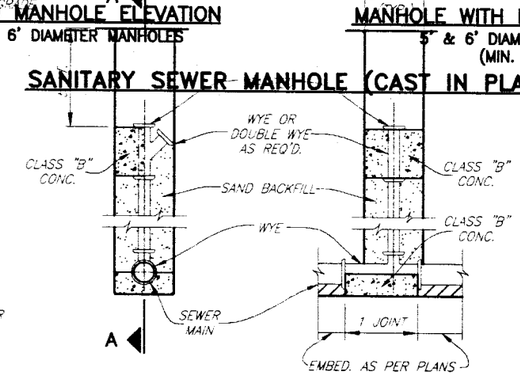

SECTION "A-A"

SANITARY SEWER MANHOLE (CAST IN PLACE)

DEEP CUT CLEANOUT

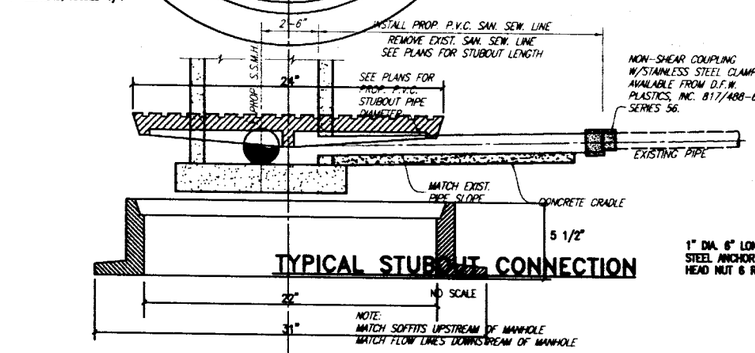

TYPICAL STUBOUT CONNECTION

MANHOLE RING AND COVER

WITH LOCKING DEVICE & PICK SLOTS

BASS AND HAYES FOUNDRY, INC.
TRAFFIC BEARING MANHOLE: 400-24
NON TRAFFIC BEARING MANHOLES: 300-24

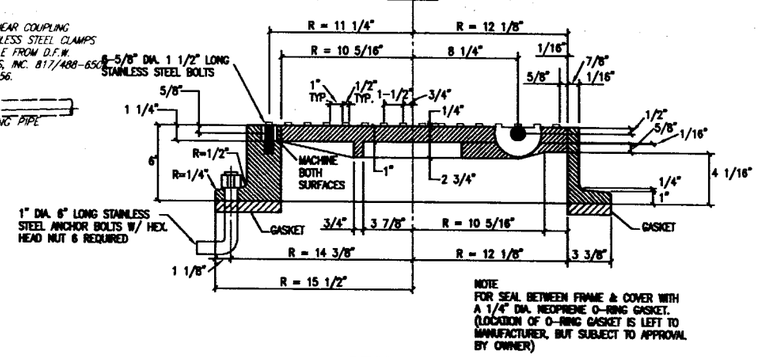

NOTE
FOR SEAL BETWEEN FRAME & COVER WITH A 1/4" DIA. NEOPRENE O-RING GASKET. (LOCATION OF O-RING GASKET IS LEFT TO MANUFACTURER, BUT SUBJECT TO APPROVAL BY OWNER)

SECTION A-A

PRESSURE TYPE MANHOLE FRAME AND COVER

THESE DOCUMENTS ARE FOR BIDDING, CONSTRUCTION, AND PERMIT PURPOSES

DATE: 12/4/98

NO.	REVISION	BY	DATE

CITY OF LANCASTER, TEXAS

STANDARD CONSTRUCTION DETAILS

SANITARY SEWER MANHOLES

DATE: DECEMBER, 1998

SHEET: SEWER-02

SEWER-DETAIL.DWG 01/27/00 GMH BLOCKS: PHONELIN, *MHAS.DWG *DWANHOLE, *WHCOV, UH-PRES-COV

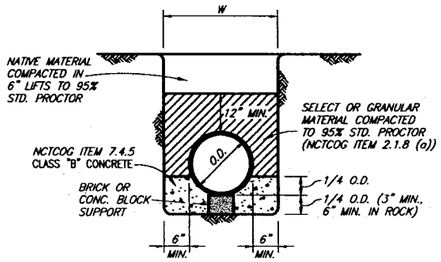

CLASS A EMBEDMENT

CONCRETE CRADLE

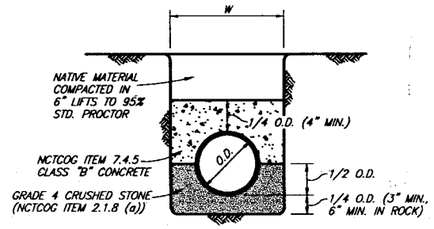

CLASS A-1 EMBEDMENT

CONCRETE CAP

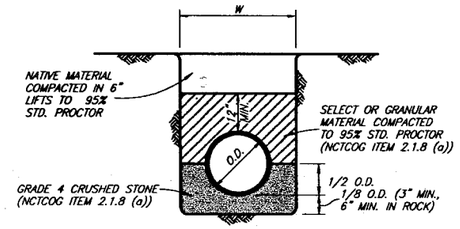

CLASS B+ EMBEDMENT

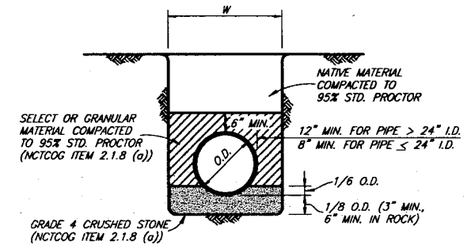

CLASS C EMBEDMENT

STD. DUCTILE IRON WATER OR SEWER
STD. R.C.C.P. WATER
STD. STORM SEWER

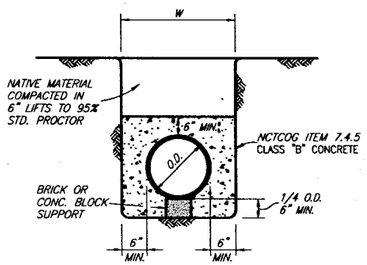

CLASS G EMBEDMENT

CONCRETE ENCASEMENT

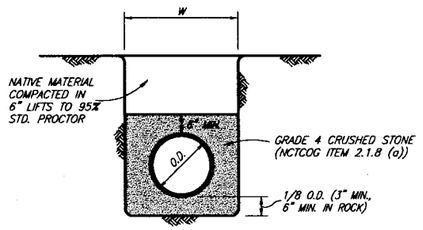

CLASS H EMBEDMENT

P.V.C. PIPE ONLY
STD. P.V.C. SEWER

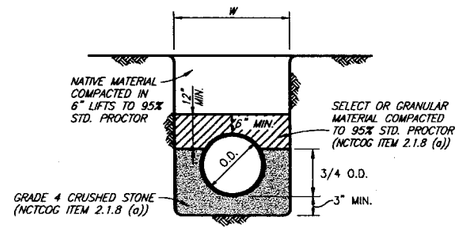

CLASS B-1 EMBEDMENT

P.V.C. PIPE ONLY
STD. P.V.C. WATER

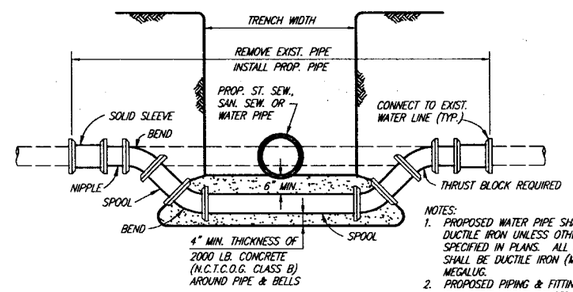

NOTES:
1. PROPOSED WATER PIPE SHALL BE DUCTILE IRON UNLESS OTHERWISE SPECIFIED IN PLANS. ALL FITTINGS SHALL BE DUCTILE IRON (M.J.-P.E.) MEGALUG.
2. PROPOSED PIPING & FITTINGS ARE SYMMETRIC ABOUT CENTER OF PROP. SAN. SEW. OR ST. SEW. PIPE AND SHALL RETAIN TEST PRESSURES.
3. ALL THRUST BLOCKING SHALL BE SUBSIDIARY TO UNIT PRICE.
4. CROSSING OF SANITARY SEWER SHALL BE IN ACCORDANCE WITH T.N.R.C.C. REQUIREMENTS.

WATER MAIN LOWERING

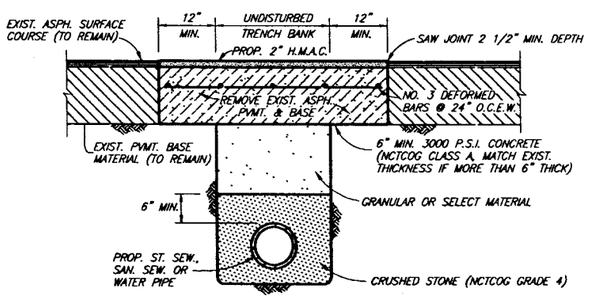

ASPHALT STREET OR DRIVEWAY REPAIR

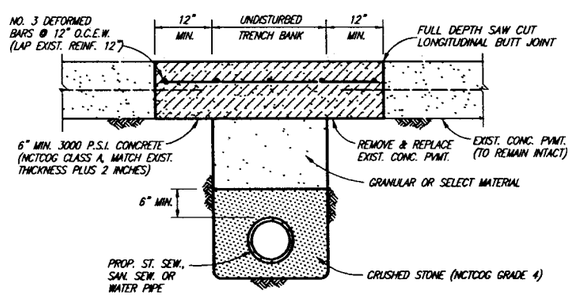

CONCRETE STREET OR DRIVEWAY REPAIR

GRADE 4 CRUSHED STONE GRADATION

SIEVE SIZE	% RETAINED
1-1/2 INCH	0
1 INCH	0-5
1/2 INCH	40-75
NO. 4	90-100
NO. 8	95-100

THESE DOCUMENTS ARE FOR BIDDING, CONSTRUCTION, AND PERMIT PURPOSES.

DATE: 2/2/00

STATE OF TEXAS
JOHN W. BIRKHOFF
54137
REGISTERED
PROFESSIONAL ENGINEER

NO.	REVISION	BY	DATE

CITY OF LANCASTER, TEXAS

STANDARD CONSTRUCTION DETAILS

TYPICAL EMBEDMENTS

DATE: DECEMBER , 1999

SHEET EMBED-01

EMBED-01.DWG 01/27/00 EWH BLOCKS: CLASSA, CLASSA1, CLASSBP, CLASSC, CLASSG, CLASSH, classb1, Wmlow, Asphtpvmt, Concpvmt, CRU-STN

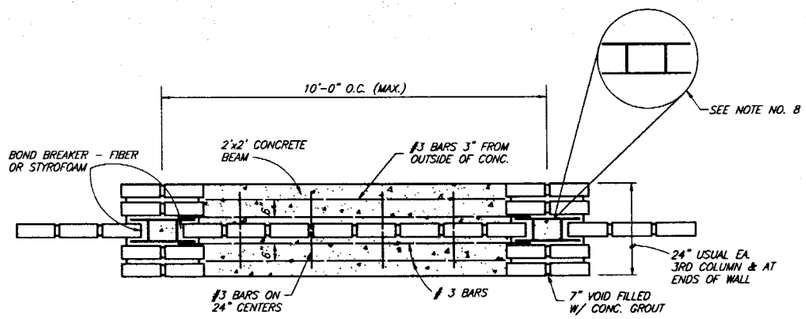

TYPICAL WALL & COLUMN LAYOUT PLAN

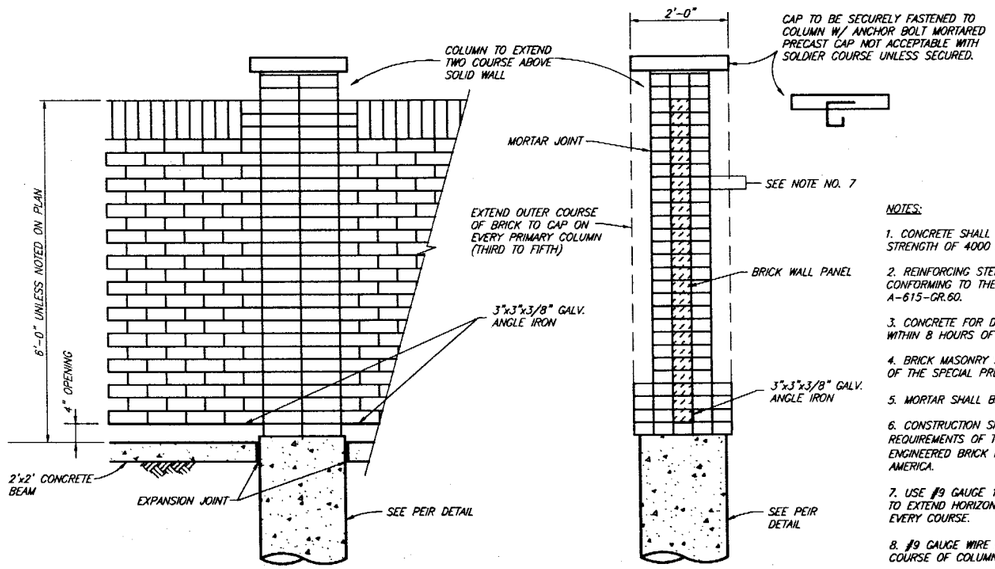

NOTES:

1. CONCRETE SHALL HAVE A MINIMUM COMPRESSIVE STRENGTH OF 4000 P.S.I. AT 28 DAYS.

2. REINFORCING STEEL SHALL BE NEW BILLET STEEL CONFORMING TO THE REQUIREMENTS OF ASTM A-615-GR.60.

3. CONCRETE FOR DRILLED PIERS SHALL BE PLACED WITHIN 8 HOURS OF DRILLING PIER HOLES.

4. BRICK MASONRY SHALL BE AS SPECIFIED IN ITEM 2.3.6 OF THE SPECIAL PREVISIONS.

5. MORTAR SHALL BE TYPE "S".

6. CONSTRUCTION SHALL BE IN ACCORDANCE WITH THE REQUIREMENTS OF THE "RECOMMENDED PRACTICE FOR ENGINEERED BRICK MASONRY"-- BRICK INSTITUTE OF AMERICA.

7. USE #9 GAUGE 1-3/4" WIDE GALVANIZED LADDER WIRE TO EXTEND HORIZONTAL IN WALL PANEL DURAWALL CORP. EVERY COURSE.

8. #9 GAUGE WIRE FABRICATED AS SHOWN BETWEEN EACH COURSE OF COLUMN BRICK.

9. THE WALL SHALL BE A MINIMUM OF SIX FEET IN HEIGHT AS MEASURED FROM THE NEAREST ALLEY EDGE OR SIDEWALK GRADE, WHICHEVER IS HIGHER. THE COLOR OF THE WALL SHALL BE SELECTED BY THE CITY.

THIN WALL BRICK SCREENING WALL ELEVATION

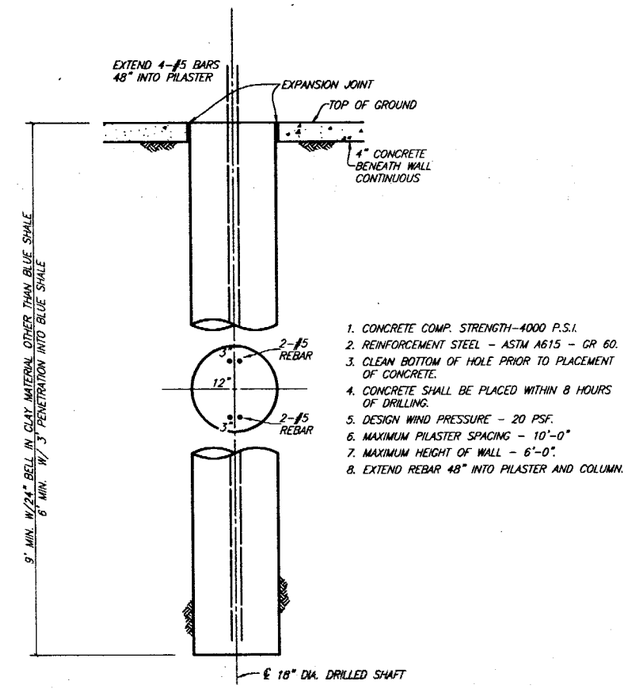

1. CONCRETE COMP. STRENGTH-4000 P.S.I.
2. REINFORCEMENT STEEL - ASTM A615 - GR 60.
3. CLEAN BOTTOM OF HOLE PRIOR TO PLACEMENT OF CONCRETE.
4. CONCRETE SHALL BE PLACED WITHIN 8 HOURS OF DRILLING.
5. DESIGN WIND PRESSURE - 20 PSF.
6. MAXIMUM PILASTER SPACING - 10'-0"
7. MAXIMUM HEIGHT OF WALL - 6'-0".
8. EXTEND REBAR 48" INTO PILASTER AND COLUMN.

PIER DETAIL

THESE DOCUMENTS ARE FOR BIDDING, CONSTRUCTION, AND PERMIT PURPOSES

DATE: 2/2/00

STATE OF TEXAS
JOHN W. BURKHOFF
54137
REGISTERED PROFESSIONAL ENGINEER

NO.	REVISION	BY	DATE

CITY OF LANCASTER, TEXAS

STANDARD CONSTRUCTION DETAILS

THIN BRICK SCREENING WALL

DATE: DECEMBER , 1999

SHEET WALL-01

BLOCKS: BRKFENCE, WALLPIER

01/27/00 EWH

WALL-01.DWG

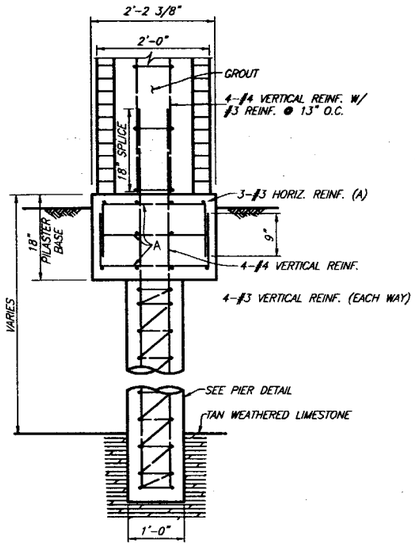

COLUMN SECTION

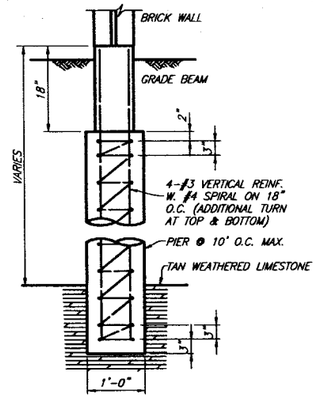

PIER DETAIL

SCREENING WALL

GENERAL NOTES:

1. CONCRETE – MINIMUM COMPRESSIVE STRENGTH OF 3000 P.S.I. AT 28 DAYS.
2. REINFORCEMENT – ASTM A 36
3. MASONRY – COMPRESSIVE STRENGTH SHALL BE AS PRESCRIBED IN ITEM 2.3.6 SPECIAL PROVISIONS.
4. WIND LOAD – 20 P.S.F.
5. PIER BEARING STRESSES – SEE BRICK SCREENING WALL NOTES.
6. MORTAR – TYPE "S"
7. PROVIDE CONTROL JOINTS AT 50 FT.
8. PROVIDE EXPANSION JOINTS AT 200 FT. CENTER MAXIMUM.
9. PROVIDE MIN. 9 FT. W/24" DIA. BELL IN CLAY OR OTHER MATERIAL EXCEPT BLUE SHALE, 6'-0" MIN. WITH 3'-0" MIN. INTO BLUE SHALE.
10. ALL EXPOSED CONCRETE SHALL BE RUBBED FINISHED SURFACE.
11. SIDEWALKS ADJACENT TO WALLS MUST BE 5'-0" MIN. WIDTH FROM ALL PORTIONS OF THE WALL (INCLUDING PILASTERS, COLUMNS, ETC.).
12. MAX. PILASTER SPACING 40 FT.
13. WALLS SHALL NOT BE PLACED IN THE VISIBILITY EASEMENT OR STREET R.O.W.
14. THE WALL SHALL BE A MINIMUM OF SIX FEET IN HEIGHT AS MEASURED FROM THE NEAREST ALLEY EDGE OR SIDEWALK GRADE, WHICHEVER IS THE HIGHER. THE COLOR OF THE WALL SHALL BE LIMITED TO EARTH-TONE COLORS, EXCLUDING GRAY, GREEN AND WHITE. THE COLOR OF THE WALL SHALL BE UNIFORM ON EACH SIDE OF A THOROUGHFARE FOR THE ENTIRE LENGTH BETWEEN INTERSECTING THOROUGHFARES, UNLESS OTHERWISE APPROVED BY THE ENGINEERING DEPARTMENT. THE FINISH OF THE WALL SHALL BE CONSISTENT ON ALL SURFACES.
15. IF WROUGHT IRON FENCING IS TO BE UTILIZED ON REQUIRED SCREENING, ALL WROUGHT IRON MUST BE SOLID STOCK, NO TUBULAR STEEL WILL BE ALLOWED.

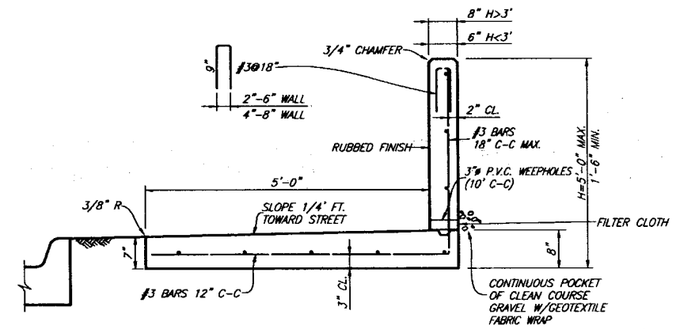

TYPE 6 RETAINING WALL

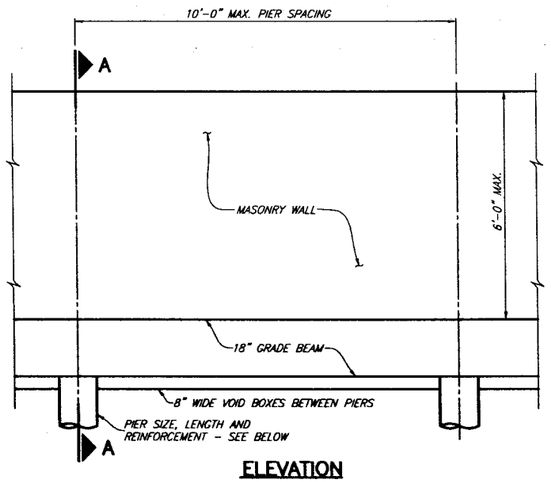

ELEVATION

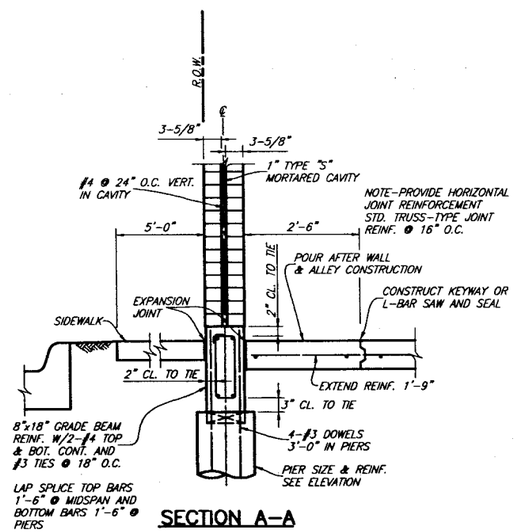

SECTION A–A

DRILLED PIERS 12" DIA. REINF. W/ 4-#5 VERT. & #4 REINF. @ 18" O.C. MINIMUM LENGTH OF PIER IS 6'-0". *PIER BOTTOM MAY BE EITHER OF THE TWO ALTERNATES:

1. 12" DIA. SHAFT EMBEDDED MINIMUM 3'-0" INTO BLUE SHALE RESULTING BEARING STRESS IS 8.0 KIPS PER SQUARE FOOT.
2. 12" DIA. SHAFT W/24" BELL IN CLAY. RESULTING BEARING STRESS IN 2.0 KIPS PER SQUARE FOOT.

* SEE GENERAL NO. 9

BRICK SCREENING WALL

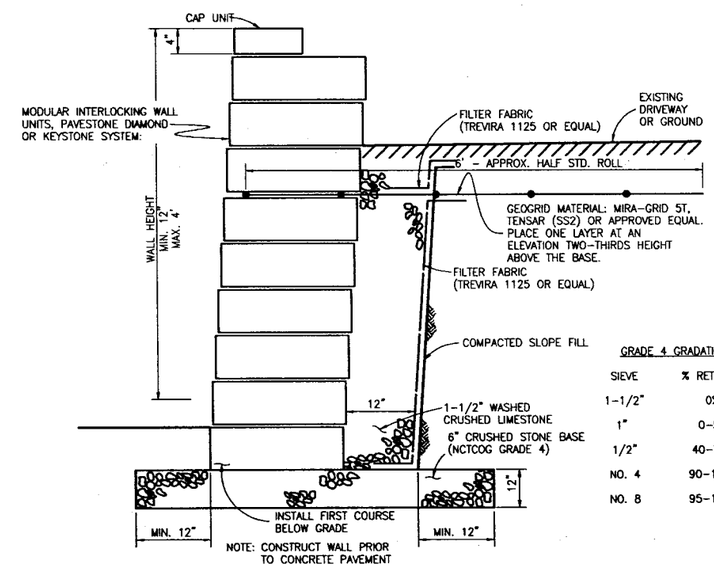

GRADE 4 GRADATION

SIEVE	% RETAINED
1-1/2"	0%
1"	0-5%
1/2"	40-75%
NO. 4	90-100%
NO. 8	95-100%

STONE RETAINING WALL

NO SCALE

THESE DOCUMENTS ARE FOR BIDDING, CONSTRUCTION, AND PERMIT PURPOSES

DATE: 2/2/00

STATE OF TEXAS — JOHN W. BURCHOFF — 54137 — REGISTERED PROFESSIONAL ENGINEER

NO.	REVISION	BY	DATE

CITY OF LANCASTER, TEXAS

STANDARD CONSTRUCTION DETAILS

BRICK SCREENING / RETAINING

DATE: DECEMBER , 1999

SHEET WALL–02