AN ORDINANCE OF THE CITY OF LANCASTER, TEXAS

ORDINANCE NO. 2013-07-09

AN ORDINANCE OF THE CITY OF LANCASTER, TEXAS, AMENDING THE CODE OF ORDINANCES BY AMENDING CHAPTER 6, ARTICLE 6.04, DIVISION 3, RESIDENTIAL CODE, SECTION 6.04.101 TO PROVIDE FOR THE ADOPTION OF THE INTERNATIONAL RESIDENTIAL CODE, 2012 EDITION, AND SECTION 6.04.102 TO PROVIDE FOR THE EXCEPTIONS AND AMENDMENTS THERETO; PROVIDING A PENALTY OF FINE NOT TO EXCEED TWO THOUSAND DOLLARS ($2,000.00); PROVIDING FOR SEVERABILITY; PROVIDING FOR SEVERABILITY; PROVIDING A SAVINGS CLAUSE; PROVIDING A REPEALING CLAUSE; AND PROVIDING FOR AN EFFECTIVE DATE.

NOW, THEREFORE, BE IT ORDAINED BY THE CITY COUNCIL OF THE CITY OF LANCASTER, TEXAS:

SECTION 1. That Chapter 6 of the Lancaster Code of Ordinances be, and the same is, hereby amended by adding Article 6.04, Division 3, Residential Code, Section 6.04.101 to provide for the adoption of the International Residential Code, 2012 Edition, and Section 6.04.102 to provide for the exceptions and amendments thereto, which shall read as follows:

"ARTICLE 6.04 TECHNICAL AND CONSTRUCTION CODES AND STANDARDS

. . . .

Division 3. Residential Code

Sec. 6.04.101. Adoption

A certain document, a copy of which is on file in the office of the city secretary of the city, being marked and designated as the International Residential Code, 2012 Edition, including appendix, as published by the International Code Council, be and is hereby adopted as the residential code of the city for regulating and governing the construction, alteration, movement, enlargement, replacement, repair, equipment, location, removal and demolition of detached one and two family dwellings and multiple single-family dwellings (townhouses) not more than three stories in height with separate means of egress as herein provided; providing for the issuance of permits and collection of fees therefore, and each and all of the regulations, provisions, penalties, conditions and terms of said residential code on file in the office of the city are hereby referred

to, adopted, and made a part hereof, as if fully set out in this article, with the additions, insertions, deletions and changes, if any, prescribed in Section 6.04.102 of this article.

Sec. 6.04.102. Exceptions and Amendments

The Residential Code adopted in this article shall be subject to the exceptions and amendments to the International Residential Code, 2012 Edition, as follows:

***Section R102.4; change to read as follows:*

R102.4 Referenced codes and standards. The codes, when specifically adopted, and standards referenced in this code shall be considered part of the requirements of this code to the prescribed extent of each such reference. Whenever amendments have been adopted to the referenced codes and standards, each reference to said code and standard shall be considered to reference the amendments as well. Any reference made to NFPA 70 or the *Electrical Code* shall mean the Electrical Code as adopted.

Where differences occur between provisions of this code and referenced codes and standards, the provisions of this code shall apply.

Exception: Where enforcement . . .*{remainder of exception unchanged.}*. . . .

***Section R105.2, Work exempt from permits; Delete section in its entirety.*

***Section 109.5 "Work without a permit" Add new section in its entirety:*

109.5 Work without a permit.

109.5.1 Investigation. Whenever work for which a permit is required by this code has been commenced without first obtaining a permit, a special investigation shall be made before a permit may be issued for such work.

109.5.2 Fee. An investigation fee, in addition to the permit fee, shall be collected whether or not a permit is subsequently issued. The investigation fee shall be equal to the amount of the permit fee required by this code or the city fee schedule as applicable. The payment of such investigation fee shall not exempt the applicant from compliance with all other provisions of either this code or the technical codes nor from penalty prescribed by law.

***Section 109.6 "Unauthorized cover up fee" Add new section in its entirety:*

109.6 Unauthorized cover up fee. Any work concealed without first obtaining the required inspection in violation of Section 105 shall be assessed a fee as established by the city fee schedule.

Section R110 (R110.1 through R110.5); delete.

Section R112, Board of Appeals, Delete section in its entirety and replace with new section R112 as follows:

Board of Appeals

(a) Any reason directly affected by a decision of the code official or a notice or order issued under this code shall have the right to appeal to the Property Standards and Appeals Board, hereinafter referred to as the "Board", provided that a written application for appeal is filed within 20 days after the day the decision, notice or order was served. An application for appeal shall be based on a claim that the true intent of this code or the rules legally adopted there under have been incorrectly interpreted, the provisions of this code do not fully apply, or the requirements of this code are adequately satisfied by other means.

(b) Membership, rules and procedures of the Board shall be those as determined by the governing body and State law unless otherwise so stated herin.

(1) The Board shall consist of five (5) members and (1) alternate member who are qualified by experience, common knowledge, and/or training to pass upon matters of construction and this code. Members shall be residents of the City and shall be appointed by the City Council for a term of two years. Alternates appointed shall serve a one year term. Vacancies shall be filled by appointment for unexpired terms. Any member may be removed from the Board by the City Council at will.

(2) Postponed hearing. When a quorum of the Board is not present to hear an appeal, the hearing will be postponed. A majority of the members (3) shall constitute a quorum of the Board. The act of a majority of the members which a quorum is in attendance shall constitute the act of the Board unless the act of a greater number is required by law.

(3) Chairman. The board shall annually select one of its members to serve as chairman.

(4) Disqualification of member. A member shall not hear an appeal in which that member has a personal, professional or financial interest.

(c) Notice of meeting. The boards shall meet upon notice from the code official within 20 days of the filing of an appeal, or at stated periodic meetings. Notice of any meeting shall be given to the public in accordance with the requirements of the Texas Open Meetings Act. All meetings shall be conducted in accordance with the Texas Open Meetings Act.

(d) Open hearing. All hearings before the board shall be open to the public. The appellant, the appellant's representative, the code official and any person whose interests are affected shall be given an opportunity to be heard.

(e) Board decision. The board shall, only by a concurring vote of a majority of those present either modify the order of the official by granting an extension of time to make all repairs and

improvements necessary to meet code requirements, enforce the recommendation of the official, or reverse the decision of the code official,

(1) Records and copies. The decision of the board shall be recorded. Copies shall be furnished to the appellant and to the code official upon request.

(2) Administration. The code official shall take immediate action in accordance with the decision of the board.

(f) Court review. Any person, whether or not a previous party of the appeal, shall have the right to apply to the appropriate court for a writ of certiorari to correct errors of law. Application for review shall be made in the manner and within 30 days following the decision of the Board.

(g) Stays of enforcement. Appeals of notice and orders (other than Imminent Danger notices) shall stay the enforcement of the notice and order until the appeal is heard by the board.

*****Section R112.2.1 & R1112.2.4 delete.***

******Section R202; add the following definition:***

HOMEOWNERS PERMIT. A homeowner permit is a permit applied for by the property owner of record that owns and resides at the address the applicant is making a permit application for, to perform a particular construction project.

*****Section R202; change definition of "Townhouse" to read as follows:***

TOWNHOUSE. A single-family dwelling unit constructed in a group of ~~three or more~~ attached units separated by property lines in which each unit extends from foundation to roof and with a yard or public way on at least two sides.

******Table R301.2(1); fill in as follows:***

GROUND SNOW LOAD	WIND DESIGN		SEISMIC DESIGN CATEGORY[f]
	SPEED[d] (mph)	Topographic Effects[k]	
5 lb/ft2	90 (3-sec-gust)/76 fastest mile	No	A

SUBJECT TO DAMAGE FROM		
Weathering[a]	Frost line depth[b]	Termite[c]
moderate	6"	very heavy

WINTER DESIGN TEMP[e]	ICE SHIELD UNDER-LAYMENT REQUIRED[h]	FLOOD HAZARDS[g]	AIR FREEZING INDEX[i]	MEAN ANNUAL TEMP[j]

22°F	No	local code	150	64.9°F

No change to footnotes

***Section R302.1; add exception #6 to read as follows:*

Exceptions: *{previous exceptions unchanged}*

6. Open non-combustible carport structures may be constructed when also approved within adopted ordinances.

***Section R302.2, Exception; change to read as follows:*

Exception: A common two-hour fire-resistance-rated wall assembly, or one-hour fire-resistance-rated wall assembly when equipped with a sprinkler system... {remainder unchanged}

***Section R302.2.4, Exception 5; change to read as follows:*

Exception: *{previous exceptions unchanged}*

5. Townhouses separated by a common ~~1 hour~~ fire-resistance-rated wall as provided in Section R302.2.

***Section R302.3; add Exception #3 to read as follows:*

Exceptions:

1. *{existing text unchanged}*
2. *{existing text unchanged}*

3. Two-family dwelling units that are also divided by a property line through the structure shall be separated as required for townhouses.

***Section R302.5.1; change to read as follows:*

R302.5.1 Opening protection. Openings from a private garage directly into a room used for sleeping purposes shall not be permitted. Other openings between the garage and residence shall be equipped with solid wood doors not less than 13/8 inches (35 mm) in thickness, solid or honeycomb core steel doors not less than 13/8 inches (35 mm) thick, or 20-minute fire-rated doors ~~equipped with a self-closing device~~.

Section R303.3, Exception; amend to read as follows:

Exception: The glazed areas {remainder unchanged} unless the space contains only a water closet, a lavatory, or water closet and a lavatory may be ventilated with an approved mechanical recirculating fan or similar device designed to remove odors from the air.

****R303.4 Mechanical Ventilation;*** change to read as follows:

Where the air infiltration rate of a dwelling unit is ~~less than~~ 5 air changes per hour ~~or less~~ when tested with a blower door at a pressure of 0.2 inch w.c. (50 Pa) in accordance with Section N1102.4.1.2, the dwelling unit shall be provided with whole-house mechanical ventilation in accordance with Section M1507.3.

****Section R315.3, *amend and add exceptions as follows*:**

Where required in existing dwellings. Where work requiring a *permit* for an addition or an alteration that occurs in existing dwellings, that have attached garages or in existing dwellings within which fuel-fired appliances exist, carbon monoxide alarms shall be provided in accordance with Section R315.1:

Exceptions:

1. Work involving the exterior surfaces of *dwellings*, such as the replacement of roofing or siding, or the *addition* or replacement of windows or doors, or the *addition* of a porch or deck, are exempt from the requirements of this section.

2. Installation, *alteration* or repairs of plumbing or mechanical systems are exempt from the requirements of this section.

****Section R401.2, amended by adding a new paragraph following the existing paragraph to read as follows.**

Section R401.2. Requirements. *{existing text unchanged} ...*
Every foundation and/or footing, or any size addition to an existing post-tension foundation, regulated by this code shall be designed and sealed by a Texas-registered engineer.

****Section 602.6.1; amend the following:***

R602.6.1 Drilling and notching of top plate. When piping or ductwork is placed in or partly in an exterior wall or interior load-bearing wall, necessitating cutting, drilling or notching of the top plate by more than 50 percent of its width, a galvanized metal tie not less than 0.054

inch thick (1.37 mm) (16 Ga) and ~~1 ½ inches (38) mm~~ 5 inches (127 mm) wide shall be fastened across and to the plate at each side of the opening with not less than eight 10d (0.148 inch diameter) having a minimum length of 1 ½ inches (38 mm) at each side or equivalent. Fasteners will be offset to prevent splitting of the top plate material. The metal tie must extend a minimum of 6 inches past the opening. See figure R602.6.1. {remainder unchanged}

*****Figure R602.6.1; delete the figure and insert the following figure:***

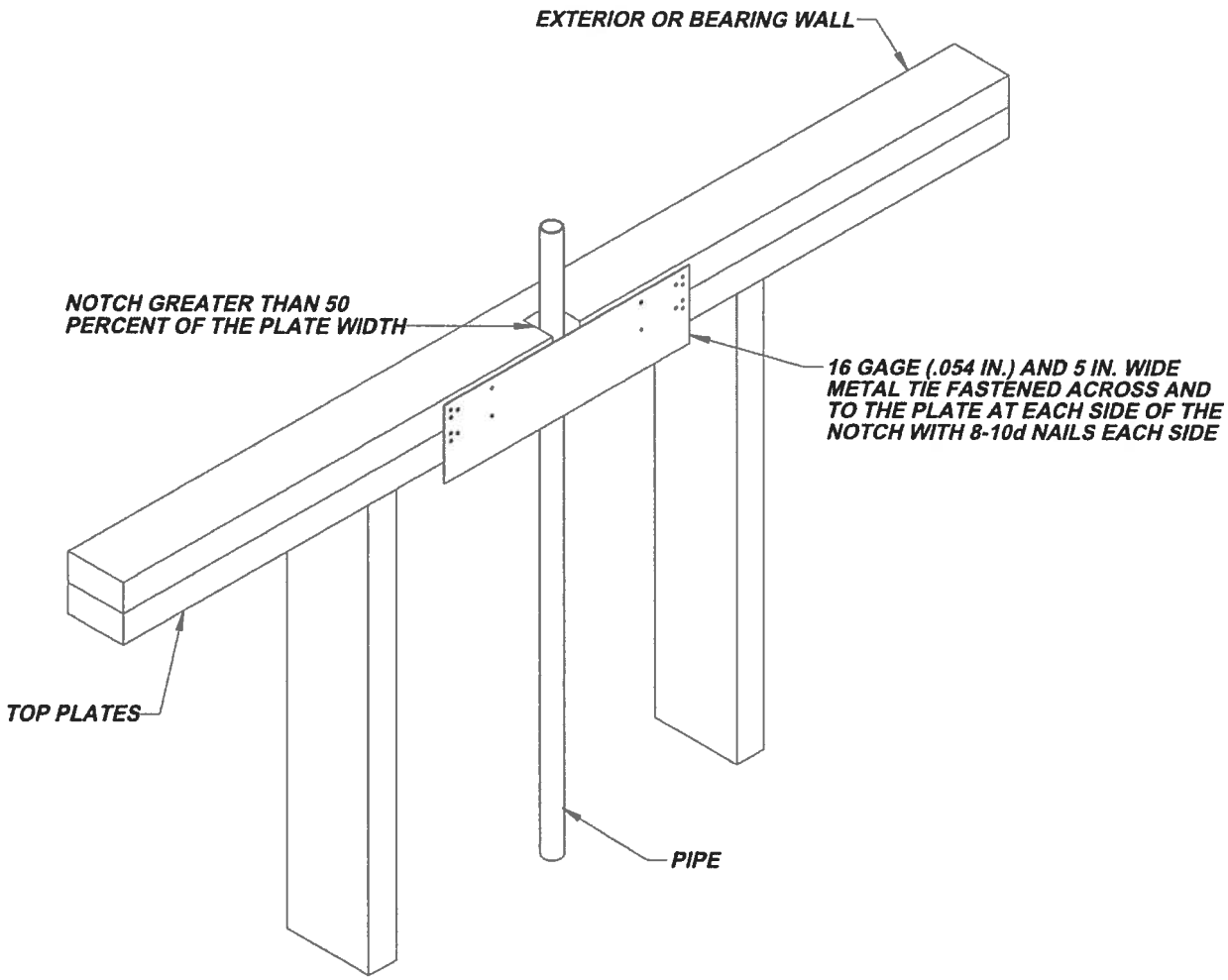

******Section R703.7.4.1; add a second paragraph to read as follows:***

In stud framed exterior walls, all ties shall be anchored to studs as follows:

1. When studs are 16 in (407 mm) o.c., stud ties shall be spaced no further apart than 24 in (737 mm) vertically starting approximately 12 in (381 mm) from the foundation; or

2. When studs are 24 in (610 mm) o.c., stud ties shall be spaced no further apart than 16 in (483 mm) vertically starting approximately 8 in (254 mm) from the foundation.

*****Section R902.1; Amend and add exception #3 to read as follows:***

R902.1 Roofing covering materials. Roofs shall be covered with materials as set forth in Sections R904 and R905. Class A, B, or C roofing shall be installed ~~in areas designated by law as requiring their use or when the edge of the roof is less than 3 feet from a lot line~~. *{remainder unchanged}*

Exceptions:

1. *{text unchanged}*
2. *{text unchanged}*
3. *{text unchanged}*
4. Non-classified roof coverings shall be permitted on one-story detached *accessory structures* used as tool and storage sheds, playhouses and similar uses, provided the floor area does not exceed (area defined by jurisdiction).

Part IV – Energy Efficiency - Chapter 11. Delete entire Chapter 11 as stated and comply with presently adopted and amended 2009 International Residential Code, Chapter 11, Energy Efficiency. All 2009 design standards are to be observed until further date when State of Texas officially adopted the 2012 International Residential Code as the adopted State code.

******Section M1305.1.3; change to read as follows:***

M1305.1.3 Appliances in attics. *Attics* containing *appliances* requiring access shall be provided . . . *{bulk of paragraph unchanged}* . . . sides of the *appliance* where access is required. The clear access opening dimensions shall be a minimum of 20 inches by 30 inches (508 mm by 762 mm), or larger and large enough to allow removal of the largest *appliance*. A walkway to an appliance shall be rated as a floor as approved by the building official. As a minimum, for *access* to the attic space, provide one of the following:

1. A permanent stair.
2. A pull down stair with a minimum 300 lb (136 kg) capacity.
3. An *access* door from an upper floor level.
4. ~~*Access* Panel may be used in lieu of items 1, 2, and 3 with prior approval of the code official due to building conditions.~~

Exceptions:

1. The passageway and level service space are not required where the *appliance* can be serviced and removed through the required opening.

2. Where the passageway is unobstructed...*{remaining text unchanged}*

*****Section M1411.3; change to read as follows:***

M1411.3 Condensate disposal. Condensate from all cooling coils or evaporators shall be conveyed from the drain pan outlet to ~~an *approved* place of disposal~~ a sanitary sewer through a trap, by means of a direct or indirect drain. *{remaining text unchanged}*

*****Section M1411.3.1, Items 3 and 4; add text to read as follows:***

M1411.3.1 Auxiliary and secondary drain systems. *{bulk of paragraph unchanged}*

1. *{text unchanged}*

2. *{text unchanged}*

3. An auxiliary drain pan... *{bulk of text unchanged}*... with Item 1 of this section. A water level detection device may be installed only with prior approval of the *building official*.

4. A water level detection device... *{bulk of text unchanged}*... overflow rim of such pan. A water level detection device may be installed only with prior approval of the *building official*.

*****Section M1411.3.1.1; add text to read as follows:***

M1411.3.1.1 Water-level monitoring devices. On down-flow units ...*{bulk of text unchanged}*... installed in the drain line. A water level detection device may be installed only with prior approval of the *building official.*

*****M1503.4 Makeup Air Required Amend and add exception as follows:**

M1503.4 Makeup air required. Exhaust hood systems capable of exhausting in excess of 400 cubic feet per minute (0.19 m3/s) shall be provided with makeup air at a rate approximately equal to the difference between the exhaust air rate and 400 cubic feet per minute. Such makeup air systems shall be equipped with a means of closure and shall be automatically controlled to start and operate simultaneously with the exhaust system.

Exception: Where all appliances in the house are of sealed combustion, power-vent, unvented, or electric, the exhaust hood system shall be permitted to exhaust up to 600 cubic feet per minute (0.28 m3/s) without providing makeup air. Exhaust hood systems capable of exhausting in excess of 600 cubic feet per minute (0.28 m3/s) shall be provided with a makeup air at a rate approximately equal to the difference between the exhaust air rate and 600 cubic feet per minute.

Section M2005.2; change to read as follows:

M2005.2 Prohibited locations. Fuel-fired water heaters shall not be installed in a room used as a storage closet or installed in any attic unless approved by the Building Official. Water heaters located in a bedroom or bathroom shall be installed in a sealed enclosure so that *combustion air* will not be taken from the living space. Access to such enclosure may be from the bedroom or bathroom when through a solid door, weather-stripped in accordance with the exterior door air leakage requirements of the *International Energy Conservation Code* and equipped with an *approved* self-closing device. Installation of direct-vent water heaters within an enclosure is not required.

Section G2408.3 (305.5); delete.

Section G2415.2.1 (404.2.1); add a second paragraph to read as follows:

Both ends of each section of medium pressure gas piping shall identify its operating gas pressure with an *approved* tag. The tags are to be composed of aluminum or stainless steel and the following wording shall be stamped into the tag:

"WARNING
1/2 to 5 psi gas pressure
Do Not Remove"

Section G2415.2.2 (404.2.2); add an exception to read as follows:

Exception: Corrugated stainless steel tubing (CSST) shall be a minimum of 1/2" (18 EDH).

Section G2415.12 (404.12); change to read as follows:

G2415.12 (404.12) Minimum burial depth. Underground *piping systems* shall be installed a minimum depth of ~~12 inches (305 mm)~~ 18 inches (457 mm) below grade, except as provided for in Section G2415.12.1.

****Section G2415.12.1 (404.12.1); change to read as follows:***

G2415.12.1) Individual outside appliances. Individual lines to outside lights, grills or other appliances shall be installed a minimum of ~~8~~ 12 inches (203 mm) below finished grade.... Rest unchanged.

*****Section G2417.1 (406.1); change to read as follows:***

G2417.1 (406.1) General. Prior to acceptance and initial operation, all *piping* installations shall be inspected and *pressure tested* to determine that the materials, design, fabrication, and installation practices comply with the requirements of this *code*. The *permit* holder shall make the applicable tests prescribed in Sections 2417.1.1 through 2417.1.5 to determine compliance with the provisions of this *code*. The *permit* holder shall give reasonable advance notice to the *building official* when the *piping system* is ready for testing. The *equipment*, material, power and labor necessary for the inspections and test shall be furnished by the *permit* holder and the *permit* holder shall be responsible for determining that the work will withstand the test pressure prescribed in the following tests.

*****Section G2417.4; change to read as follows:***

G2417.4 (406.4) Test pressure measurement. Test pressure shall be measured with a manometer or with a pressure-measuring device designed and calibrated to read, record, or indicate a pressure loss caused by leakage during the *pressure test* period. The source of pressure shall be isolated before the *pressure tests* are made. ~~Mechanical gauges~~ Gauges used to measure... *{remainder unchanged}*

*****Section G2417.4.1; change to read as follows:***

G2417.4.1 (406.4.1) Test pressure. The test pressure to be used shall be not less than ~~one and one half times the proposed maximum working pressure, but not less than~~ 3 psig (20 kPa gauge), or at the discretion of the *Building Official*, the *piping* and *valves* may be tested at a pressure of at least six (6) inches (152 mm) of mercury, measured with a manometer or slope gauge. ~~irrespective of design pressure. Where the test pressure exceeds 125 psig (862 kPa gauge), the test pressure shall not exceed a value that produces a hoop stress in the *piping* greater than 50 percent of the specified minimum yield strength of the *pipe*.~~ For tests requiring a pressure of 3 psig, ~~mechanical~~ gauges ~~used to measure test pressures~~ shall utilize a dial with a minimum diaphragm diameter of three and one half inches (3 ½"), a set hand, 1/10 pound incrementation and pressure range not to exceed 6 psi for tests requiring a pressure of 3 psig. For tests requiring a pressure of 10 psig, ~~mechanical~~ diaphragm gauges shall utilize a dial with a minimum diameter of three and one-half inches (3 ½"), a set hand, a minimum of 2/10 pound incrementation and a pressure range not to exceed 20 psi. ~~have a range such that the highest end of the scale is not greater than five times the test pressure~~.

For welded *piping*, and for *piping* carrying gas at pressures in excess of fourteen (14) inches water column pressure (3.48 kPa) (1/2 psi) and less than 200 inches of water column pressure (52.2 kPa) (7.5 psi), the test pressure shall not be less than ten (10) pounds per square inch (69.6 kPa). For *piping* carrying gas at a pressure that exceeds 200 inches of water column (52.2 kPa) (7.5 psi), the test pressure shall be not less than one and one-half times the proposed maximum working pressure.

*****Section G2417.4.2, change to read as follows:***

G2417.4.2 (406.4.2) Test duration. The test duration shall be held for a length of time satisfactory to the *Building Official*, but in no case for ~~be not~~ less than ~~10~~ fifteen (15) minutes. For welded *piping*, and for *piping* carrying gas at pressures in excess of fourteen (14) inches water column pressure (3.48 kPa), the test duration shall be held for a length of time satisfactory to the *Building Official*, but in no case for less than thirty (30) minutes.

*****Section G2420.1 (406.1); add Section G2420.1.4 to read as follows:***

G2420.1.4 Valves in CSST installations. Shutoff *valves* installed with corrugated stainless steel (CSST) *piping systems* shall be supported with an approved termination fitting, or equivalent support, suitable for the size of the *valves*, of adequate strength and quality, and located at intervals so as to prevent or damp out excessive vibration but in no case greater than 12-inches from the center of the *valve*. Supports shall be installed so as not to interfere with the free expansion and contraction of the system's *piping*, fittings, and *valves* between anchors. All *valves* and supports shall be designed and installed so they will not be disengaged by movement of the supporting *piping*.

******Section G2420.5.1 (409.5.1); add text to read as follows:***

G2420.5.1 (409.5.1) Located within the same room. The shutoff valve ...*{bulk of paragraph unchanged}*... in accordance with the appliance manufacturer's instructions. A secondary shutoff valve must be installed within 3 feet (914 mm) of the firebox if appliance shutoff is located in the firebox.

*****Section G2421.1 (410.1); add text and Exception to read as follows:***

G2421.1 (410.1) Pressure regulators. A line *pressure regulator* shall be ... *{bulk of paragraph unchanged}*... *approved* for outdoor installation. Access to *regulators* shall comply with the requirements for access to *appliances* as specified in Section M1305.

> **Exception:** A passageway or level service space is not required when the *regulator* is capable of being serviced and removed through the required *attic* opening.

Section G2422.1.2.3 (411.1.3.3); delete Exception 1 and Exception 4.

Section G2445.2 (621.2); add Exception to read as follows:

G2445.2 (621.2) Prohibited use. One or more *unvented room heaters* shall not be used as the sole source of comfort heating in a *dwelling unit.*
Exception: Existing *approved unvented room heaters* may continue to be used in *dwelling units*, in accordance with the *code* provisions in effect when installed, when *approved* by the *Building Official* unless an unsafe condition is determined to exist as described in *International Fuel Gas Code* Section 108.7 of the Fuel Gas Code.

Section G2448.1.1 (624.1.1); change to read as follows:
G2448.1.1 (624.1.1) Installation requirements. The requirements for *water heaters* relative to access, sizing, *relief valves*, drain pans and scald protection shall be in accordance with this *code.*

Section P2801.6; add Exception to read as follows:

Exceptions:

1. Electric Water Heater.

Section P2902.5.3; change to read as follows:

P2902.5.3 Lawn irrigation systems. The potable water supply to lawn irrigation systems shall be protected against backflow by an atmospheric-type vacuum breaker, a pressure-type vacuum breaker, a double-check assembly or a reduced pressure principle backflow preventer. A valve shall not be installed downstream from an atmospheric vacuum breaker. Where chemicals are introduced into the system, the potable water supply shall be protected against backflow by a reduced pressure principle backflow preventer.

Section P3005.2.6; change to read as follows:

P3005.2.6 ~~Base of stacks~~ Upper Terminal. ~~A cleanout shall be provided at the base of each waste or soil stack~~. Each horizontal drain shall be provided with a cleanout at its upper terminal.

Exception: Cleanouts may be omitted on a horizontal drain less than five (5) feet (1524 mm) in length unless such line is serving sinks or urinals.

Section P3111; delete.

Section P3112.2; delete and replace with the following:

P3112.2 Installation. Traps for island sinks and similar equipment shall be roughed in above the floor and may be vented by extending the vent as high as possible, but not less than the drainboard height and then returning it downward and connecting it to the horizontal sink drain immediately downstream from the vertical fixture drain. The return vent shall be connected to the horizontal drain through a wye-branch fitting and shall, in addition, be provided with a foot vent taken off the vertical fixture vent by means of a wye-branch immediately below the floor and extending to the nearest partition and then through the roof to the open air or may be connected to other vents at a point not less than six (6) inches (152 mm) above the flood level rim of the fixtures served. Drainage fittings shall be used on all parts of the vent below the floor level and a minimum slope of one-quarter (1/4) inch per foot (20.9 mm/m) back to the drain shall be maintained. The return bend used under the drainboard shall be a one (1) piece fitting or an assembly of a forty-five (45) degree (0.79 radius), a ninety (90) degree (1.6 radius) and a forty-five (45) degree (0.79 radius) elbow in the order named. Pipe sizing shall be as elsewhere required in this Code. The island sink drain, upstream of the return vent, shall serve no other fixtures. An accessible cleanout shall be installed in the vertical portion of the foot vent.

*** Section 3114: Air Admittance Valve: Delete section in its entirety."***

SECTION 2. Any person, firm or corporation violating any of the provisions of this ordinance or the provisions of the Code of Ordinances of the City of Lancaster, Texas, as amended hereby, shall be deemed guilty of a misdemeanor and, upon conviction in the municipal court of the City of Lancaster, Texas, shall be subject to a fine not to exceed the sum of Two Thousand ($2,000.00) dollars for each offense, and each and every day such offense shall continue shall be deemed to constitute a separate offense.

SECTION 3. That all provisions of the Ordinances of the City of Lancaster, Texas, in conflict with the provisions of this ordinance be, and the same are hereby, repealed, and all other provisions of the Ordinances of the City not in conflict with the provisions of this ordinance shall remain in full force and effect.

SECTION 4. That should any word, sentence, paragraph, subdivision, clause, phrase or section of this ordinance, or of the Code of Ordinances, as amended hereby, be adjudged or held to be void or unconstitutional, the same shall not affect the validity of the remaining portions of said

ordinance or the Code of Ordinances, as amended hereby, which shall remain in full force and effect.

SECTION 5. That this ordinance shall take effect immediately from and after its passage as the law and charter in such cases provide.

DULY PASSED by the City Council of the City of Lancaster, Texas, this the 22nd day of July, 2013.

APPROVED:

MARCUS E. KNIGHT, MAYOR

ATTEST:

DOLLE K. DOWNE, CITY SECRETARY

APPROVED AS TO FORM:

ROBERT E. HAGER, CITY ATTORNEY
(REH/aga)

TM.60883